FLEMING

MACHINERY FOR AGRICULTURE
AND COUNTRYSIDE CARE

VACUUM TANKER SPARE PARTS LIST

Table of Contents:

VACUUM TANKER SPARE PARTS LIST

ST1100N,ST1300N and ST1600N MAIN ASSEMBLY	Pages 2-3
NON RECESSED TANKER FRONT VIEW	Pages 4-5
NON RECESSED TANKER REAR VIEW	Pages 6-7
NON RECESSED TANKER LIGHTS ASSEMBLY	Pages 8-9
NON RECESSED TANKER BRAKE ASSEMBLY	Pages 10-11
NON RECESSED TANKER HAND BRAKE ASSEMBLY	Pages 12-13
NON RECESSED TANKER SPREADING HYDRAULIC ASSEMBLY	Pages 14-15
ST1100N TVZ AXLE PART NUMBER ZGPP17A	Pages 16-17
ST1300N & ST1600N TVZ AXLE PART NUMBER ZGPP17	Pages 18-19
ST1600 and ST2000 RECESSED TANKER MAIN ASSEMBLY	Pages 20-21
CRANKED AXLE RECESSED TANKER MAIN ASSEMBLY	Pages 22-23
RECESSED TANKER FRONT VIEW	Pages 24-25
RECESSED TANKER REAR VIEW	Pages 26-27
RECESSED TANKER LIGHTS	Pages 28-29
RECESSED TANKER BRAKE ASSEMBLY	Pages 30-31
RECESSED TANKER HAND BRAKE ASSEMBLY	Pages 32-33
RECESSED TANKER SPREADING HYDRAULIC ASSEMBLY	Pages 34-35
ST1600 and ST2000 TVZ AXLE PART NUMBER ZTAN35A (NEW)	Pages 36-37
ST1600 and ST2000 TVZ AXLE PART NUMBER ZTAN35 (OLD)	Pages 38-39
CRANKED AXLE PART NUMBER ZTAN54	Pages 40-42
PRIMARY FLOAT VALVE (CURRENT VERSION)	Pages 43-44
PRIMARY FLOAT VALVE (OLD VERSION)	Pages 45-46
PRIMARY FLOAT VALVE (OLD VERSION)	Pages 47-48
SECONDARY TRAP ASSEMBLY PART NUMBER ZTAN08	Pages 49-50

6” GATE VALE ASSEMBLY Pages 51-52

REAR DISCHARGE 6” MZ GATE VALVE Pages 53-54

QUICK ATTACH ASSEMBLY Pages 55-56

SPRINKLER ASSEMBLY Pages 57-58

COMER PTO SHAFT PART NUMBER ZGPP114 Page 59

MEC8000/M VACUUM PUMP PARTS LIST Pages 60-64

MEC11000/M VACUUM PUMP PARTS LIST Pages 65-69

HERTELL VACUUM PUMP PARTS LIST Pages 70-71

MEC8000M HYDRAULIC CHANGE OVER ASSEMBLY Pages 72-73

MEC11000M HYDRAULIC CHANGE OVER ASSEMBLY Pages 74-75

ST1100N,ST1300N and ST1600N NON RECESSED TANKERS

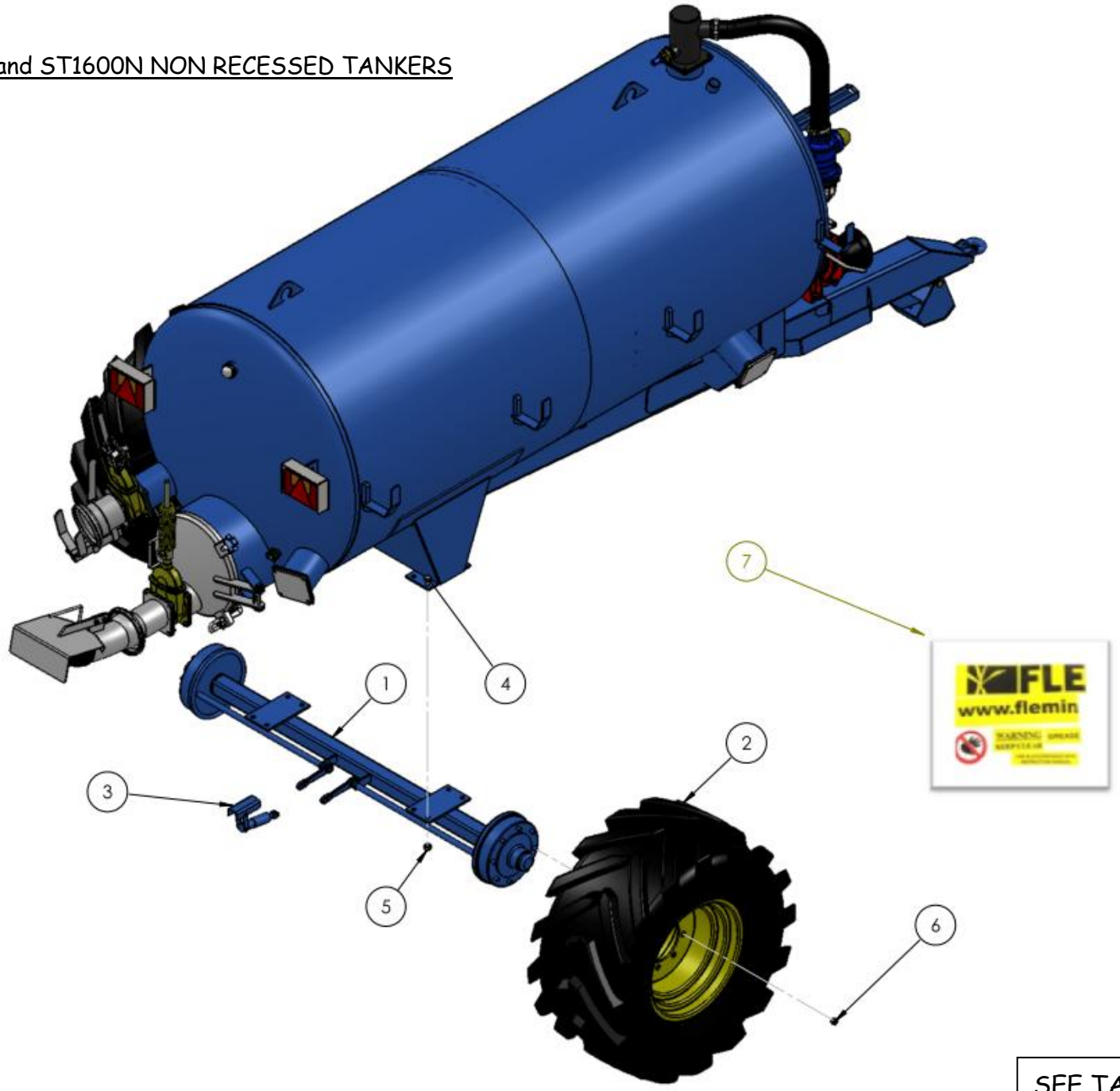

SEE TABLE NO: 001

TABLE NO: 001 ST1100N,ST1300N and ST1600N NON RECESSED TANKERS MAIN ASSEMBLY							
		ST1100		ST1300		ST1600N	
ITEM NO	DESCRIPTION	CODE	QTY	CODE	QTY	CODE	QTY
1	BRAKED AXLE COMPLETE	ZGPP17A	1	ZGPP17	1	ZGPP17	1
2	COMPLETE WHEEL	ZGPP16A	2	ZGPP16	2	ZGPP16	2
3	BRAKE ASSEMBLY	ZGPP124	1	ZGPP124	1	ZGPP124	1
4	M20x45 SETSCREW ZP	ZFAS12	8	ZFAS12	8	ZFAS12	8
5	M20 NYLOCK NUT	ZFAS24	8	ZFAS24	8	ZFAS24	8
6	WHEEL NUT	AX-181.5	16	AX-181.5	16	AX-181.5	16
7	STICKER KIT	P001.555	1	P001.556	1	P001.557	1

NON RECESSED TANKER FRONT VIEW

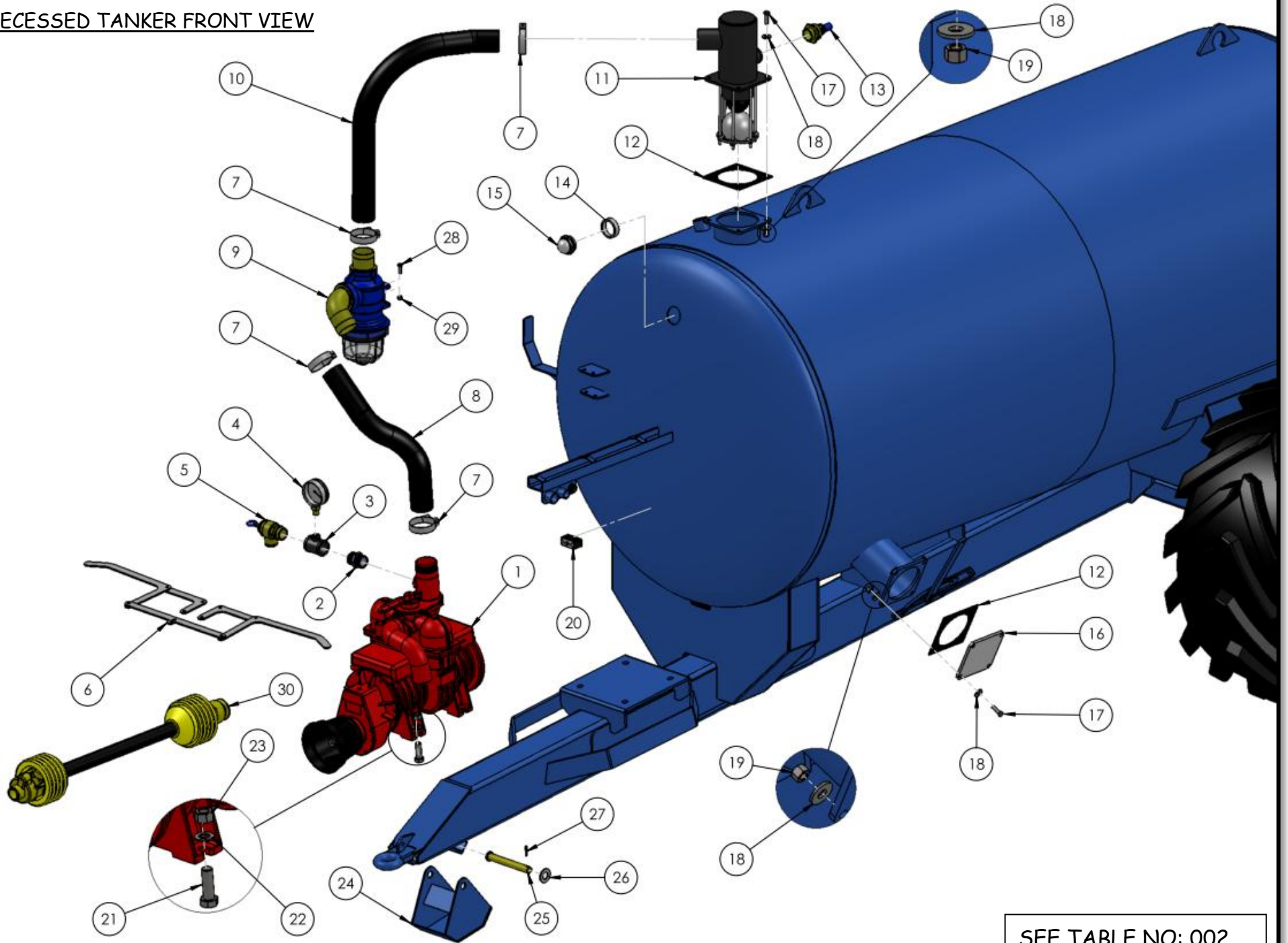

SEE TABLE NO: 002

TABLE NO: 002 ST1100N,ST1300N and ST1600N NON RECESSED TANKER FRONT VIEW							
		ST1100N		ST1300N		ST1600N	
ITEM NO	DESCRIPTION	CODE	QTY	CODE	QTY	CODE	QTY
1	MEC8000M 8000 LITRE PUMP	ZTAN01	1	ZTAN01	1	ZTAN01	1
2	1 ½" HEX NIPPLE	ZTAN05	1	ZTAN05	1	ZTAN05	1
3	GALV T 1 ½" x 1 ½" x ½"	ZTAN06	1	ZTAN06	1	ZTAN06	1
4	PRESSURE GAUGE	ZTAN07	1	ZTAN07	1	ZTAN07	1
5	1 ½" SAFETY VALVE	ZTAN04	1	ZTAN04	1	ZTAN04	1
6	HANDLE ASSEMBLY	P001.600	1	P001.600	1	P001.600	1
7	3" HOSE CLIP	ZTAN32	4	ZTAN32	4	ZTAN32	4
8	80mm SUCTION HOSE	P001.601	1	P001.602	1	P001.603	1
9	SYPHON	ZTAN08	1	ZTAN08	1	ZTAN08	1
10	80mm SUCTION HOSE	P001.604	1	P001.605	1	P001.606	1
11	TOP TRAP	PAGE 43-48		PAGE 43-48		PAGE 43-48	
12	GASKET	ZTAN23	2	ZTAN23	2	ZTAN23	2
13	1 ½" DECOMPRESSION VALVE	ZTAN03	1	ZTAN03	1	ZTAN03	1
14	3" SIGHT GLASS RING	ZTAN38	2	ZTAN38	2	ZTAN38	2
15	3" SIGHT GLASS	ZTAN39	2	ZTAN39	2	ZTAN39	2
16	6" BLANKING PLATE	ZPPA509	1	ZPPA509	1	ZPPA509	1
17	M12x40 SETSCREWS ZP	ZFAS51	8	ZFAS51	8	ZFAS51	8
18	M12 WASHER ZP	ZFAS45	16	ZFAS45	16	ZFAS45	16
19	M12 NYLOCK NUT ZP	ZFAS22	8	ZFAS22	8	ZFAS22	8
20	DOUBLE HOSE HOLDER	ZHYD14	4	ZHYD14	4	ZHYD14	4
21	M16x60 SETSCREW ZP	ZFAS82	4	ZFAS82	4	ZFAS82	4
22	M18 WASHER ZP	ZFAS111	4	ZFAS111	4	ZFAS111	4
23	M16 NYLOCK NUT ZP	ZFAS23	4	ZFAS23	4	ZFAS23	4
24	DRAWBAR STAND	P001.424	1	P001.424	1	P001.424	1
25	DRAWBAR PIN	ZMAC73	1	ZMAC73	1	ZMAC73	1
26	1" WASHER ZP	ZFAS49	1	ZFAS49	1	ZFAS49	1
27	M6x40 LINCH PIN	ZFAS34	1	ZFAS34	1	ZFAS34	1
28	M10x30 SETSCREW ZP	ZFAS07	4	ZFAS07	4	ZFAS07	4
29	M10 NYLOCK NUT	ZFAS20	4	ZFAS20	4	ZFAS20	4
30	PTO SHAFT	ZGPP114	1	ZGPP114	1	ZGPP114	1

NON RECESSED TANKER REAR VIEW:

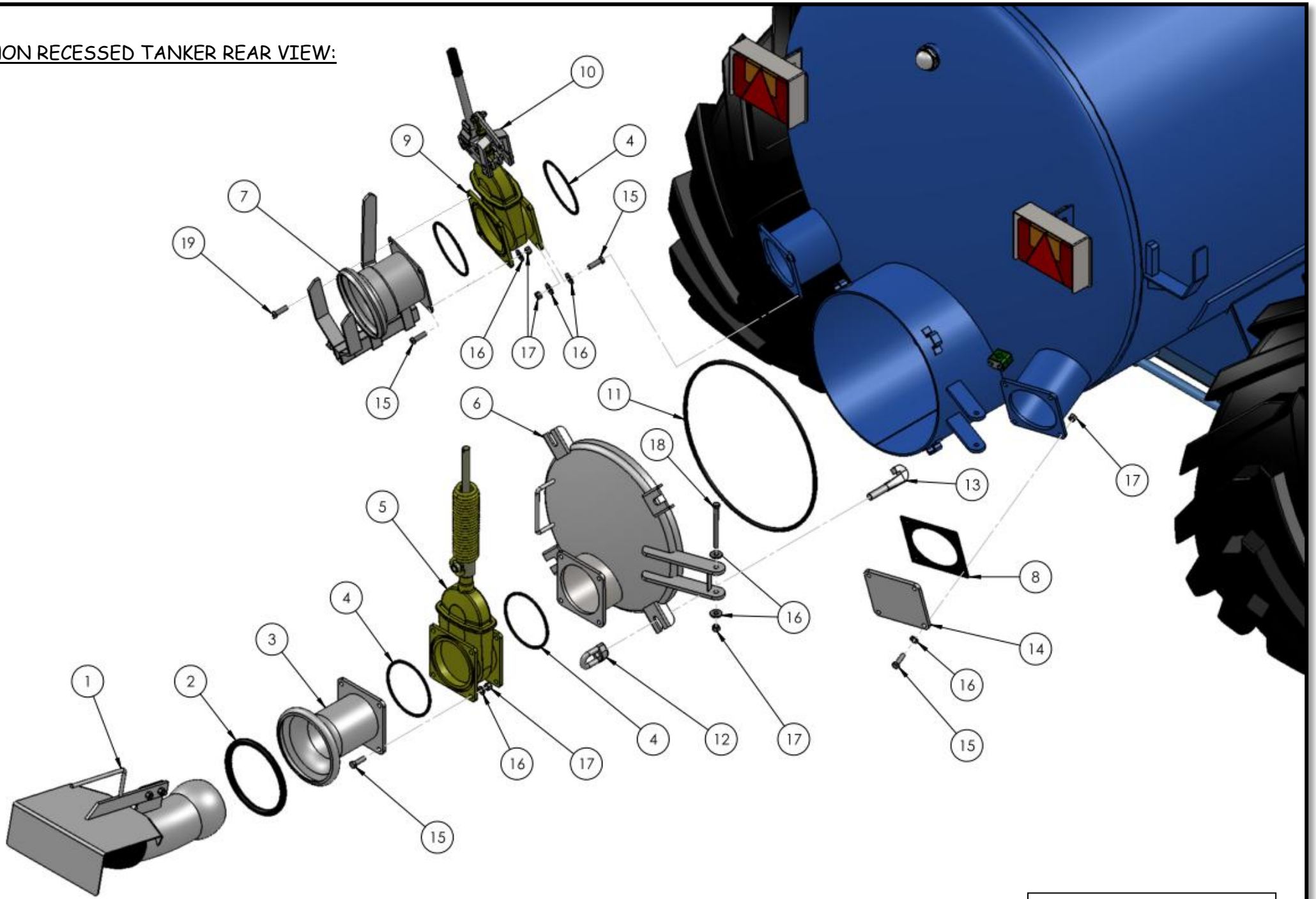

SEE TABLE NO: 003

TABLE NO: 003 ST1100N,ST1300N and ST1600N NON RECESSED TANKER REAR VIEW							
		ST1100N		ST1300N		ST1600N	
ITEM NO	DESCRIPTION	CODE	QTY	CODE	QTY	CODE	QTY
1	SPLASH PLATE FEMALE	ZTAN14	1	ZTAN14	1	ZTAN14	1
1	SPLASH PLATE MALE	ZTAN14A	1	ZTAN14A	1	ZTAN14A	1
2	O-RING	P001.609	1	P001.609	1	P001.609	1
3	MALE FLANGE COUPLING	ZTAN12	1	ZTAN12	1	ZTAN12	1
3	FEMALE FLANGE COUPLING	ZTAN12A	1	ZTAN12A	1	ZTAN12A	1
4	GATE VALVE O-RING	VT-6080500	4	VT-6080500	4	VT-6080500	4
5	6” GATE VALVE c/w RAM	ZTAN15A	1	ZTAN15A	1	ZTAN15A	1
6	TANKER HATCH	P001.607	1	P001.607	1	P001.607	1
7	6” QUICK ATTACH PERROT	ZTAN11	1	ZTAN11	1	ZTAN11	1
8	FLANGE GASKET	ZTAN23	2	ZTAN23	2	ZTAN23	2
9	6” GATE VALVE	ZTAN15	1	ZTAN15	1	ZTAN15	1
10	GATE VALVE HANDLE	ZTAN16	1	ZTAN16	1	ZTAN16	1
11	TANKER HATCH O-RING	P001.608	1	P001.608	1	P001.608	1
12	TANKER HOOK NUT	ZTAN25	4	ZTAN25	4	ZTAN25	4
13	TANKER HOOK	ZTAN24A	4	ZTAN24A	4	ZTAN24A	4
	COMPLETE TANKER HOOK	ZTAN24	4	ZTAN24	4	ZTAN24	4
14	6” BLANKING PLATE	ZPPA509	1	ZPPA509	1	ZPPA509	1
15	M12x40 SETSCREWS ZP	ZFAS51	8	ZFAS51	8	ZFAS51	8
16	M12 WASHER ZP	ZFAS45	16	ZFAS45	16	ZFAS45	16
17	M12 NYLOCK NUT ZP	ZFAS22	8	ZFAS22	8	ZFAS22	8
18	M12x140 BOLT ZP	ZFAS119	1	ZFAS119	1	ZFAS119	1
19	M12x35 SETSCREW ZP	ZFAS137	8	ZFAS137	8	ZFAS137	8

NON RECESSED TANKER LIGHTS

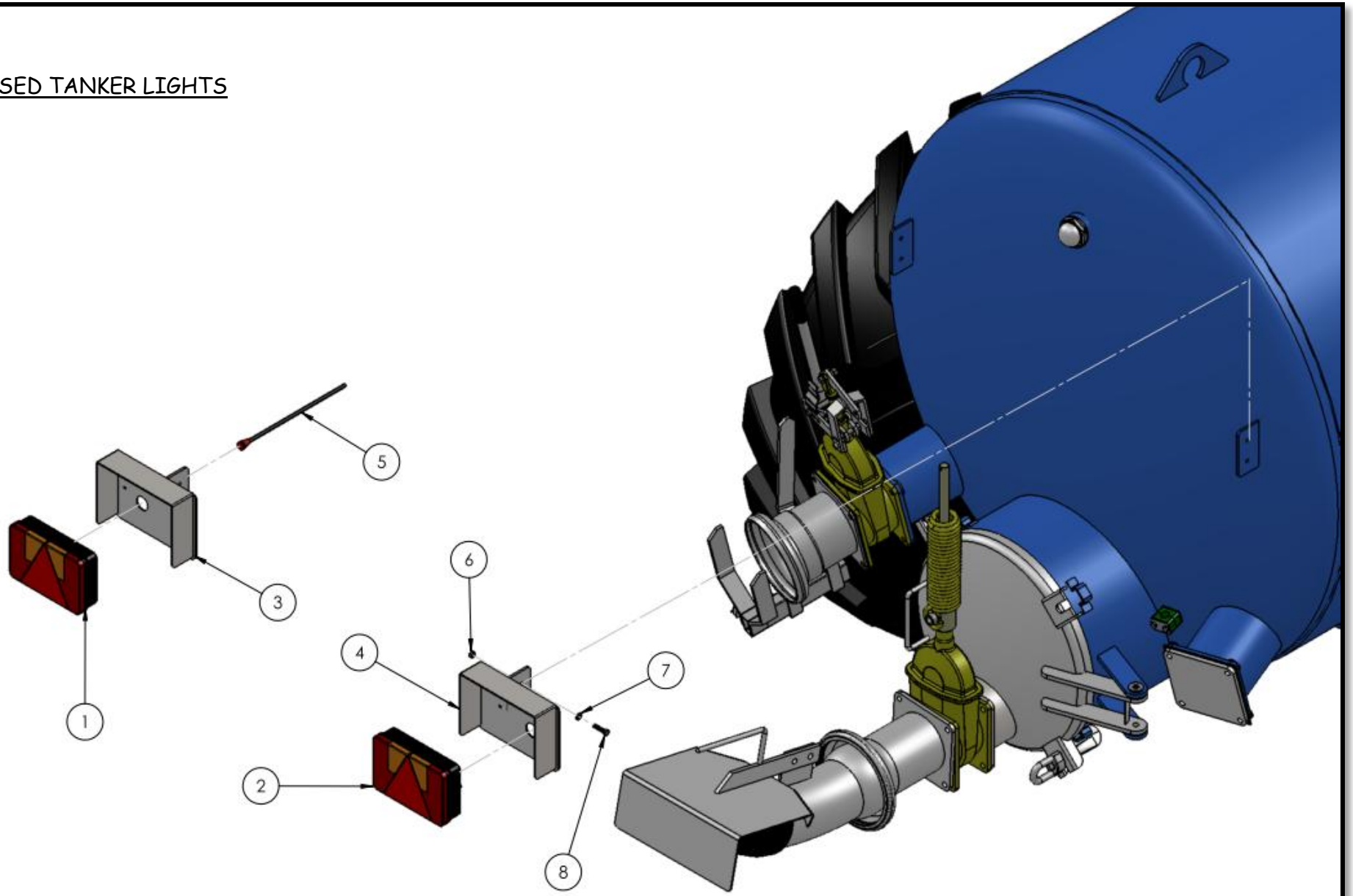

SEE TABLE NO: 004

TABLE NO: 004 ST1100N,ST1300N and ST1600N NON RECESSED TANKER LIGHT ASSEMBLY							
		ST1100		ST1300		ST1600N	
ITEM NO	DESCRIPTION	CODE	QTY	CODE	QTY	CODE	QTY
1	LHD TAIL LIGHT	ZGPP180	1	ZGPP180	1	ZGPP180	1
2	LHD TAIL LIGHT HOLDER	P001.347	1	P001.347	1	P001.347	1
3	RHD TAIL LIGHT	ZGPP181	1	ZGPP181	1	ZGPP181	1
4	RHD TAIL LIGHT HOLDER	P001.348	1	P001.348	1	P001.348	1
5	WIRING LOOM	ZGPP179	1	ZGPP179	1	ZGPP179	1
6	M8 NYLOCK ZP	ZFAS55	4	ZFAS55	4	ZFAS55	4
7	M8 WASHER ZP	ZFAS132	4	ZFAS132	4	ZFAS132	4
8	M8X35 SET SCREW ZP	ZFAS103	4	ZFAS103	4	ZFAS103	4

NON RECESSED TANKER BRAKE ASSEMBLY

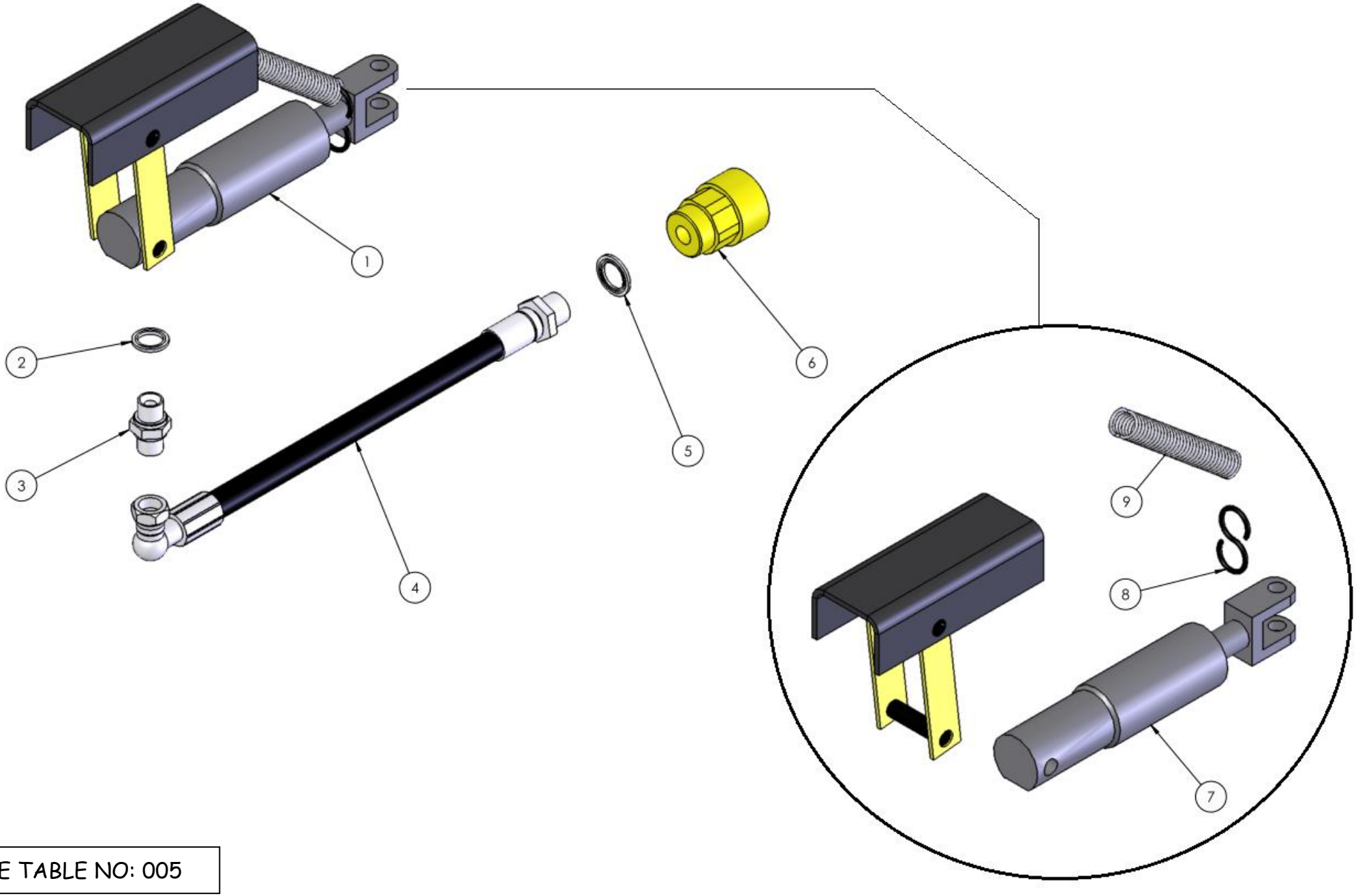

SEE TABLE NO: 005

TABLE NO: 005 ST1100N,ST1300N and ST1600N NON RECESSED TANKER BRAKE ASSEMBLY							
ITEM NO	DESCRIPTION	ST1100		ST1300		ST1600N	
		CODE	QTY	CODE	QTY	CODE	QTY
1	COMPLETE BRAKE ASSEMBLY	ZGPP124	1	ZGPP124	1	ZGPP124	1
2	3/8” DOWDY SEAL	ZHYD05	1	ZHYD05	1	ZHYD05	1
3	3/8” x 3/8” MALE CONNECTOR	ZHYD03	1	ZHYD03	1	ZHYD03	1
4	HYDRAULIC HOSE (Includes Brake fitting)	ZHYD56	1	ZHYD56	1	ZHYD56	1
5	DOWDY SEAL	ZHYD22	1	ZHYD22	1	ZHYD22	1
6	BRAKE COUPLING	ZHYD25	1	ZHYD25	1	ZHYD25	1
7	REPLACEMENT BRAKE CYLINDER	ZGPP73	1	ZGPP73	1	ZGPP73	1
8	S CLIP	P001.354	1	P001.354	1	P001.354	1
9	RETURN SPRING	ZSPR11	1	ZSPR11	1	ZSPR11	1

ST1100N,ST1300N and ST1600N HANDBRAKE ASSEMBLY

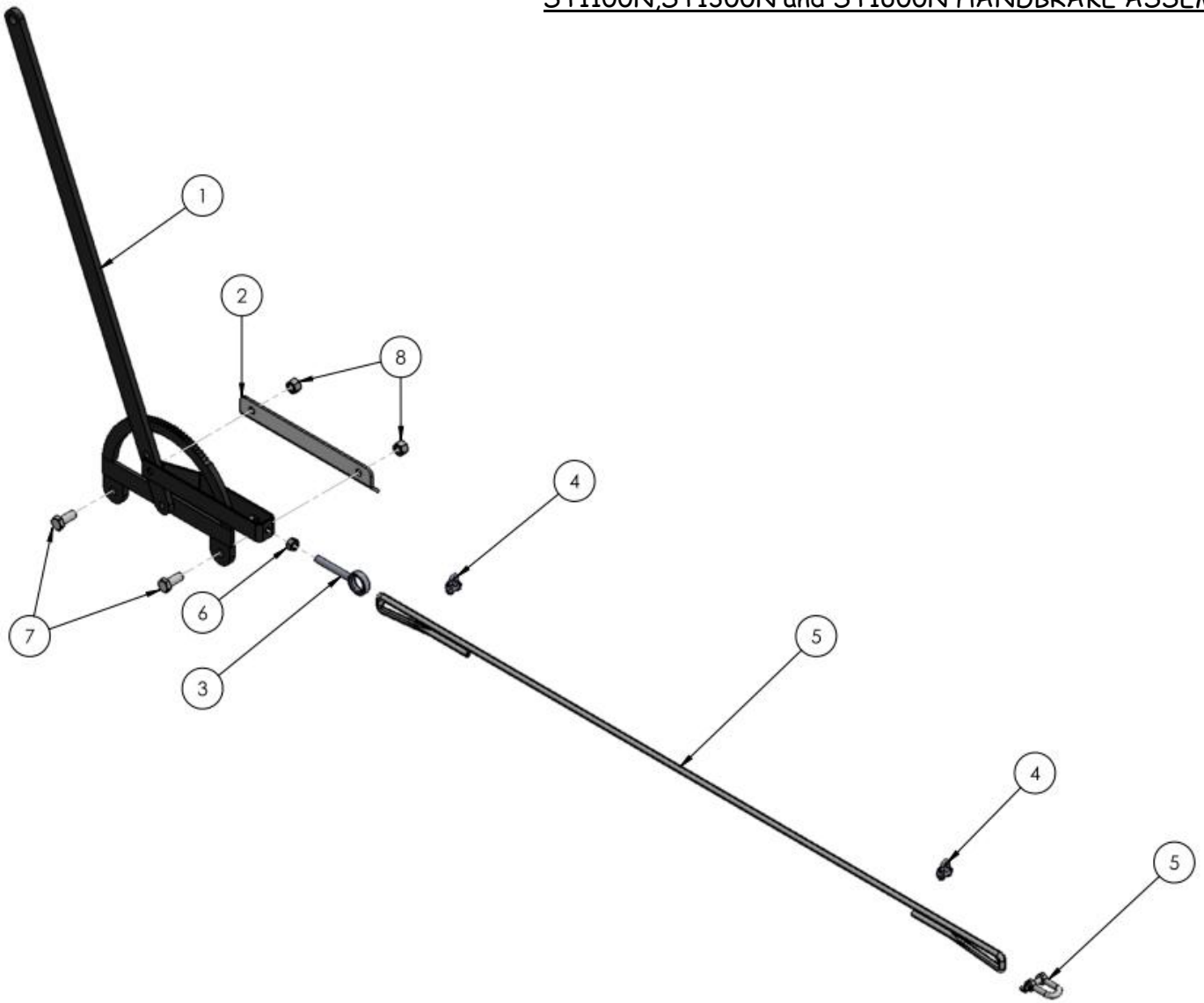

SEE TABLE NO: 006

TABLE NO: 006 ST1100N,ST1300N and ST1600N NON RECESSED TANKER HAND BRAKE ASSEMBLY							
ITEM NO	DESCRIPTION	ST1100		ST1300		ST1600N	
		CODE	QTY	CODE	QTY	CODE	QTY
1	HAND BRAKE LEVER	ZGPP227	1	ZGPP227	1	ZGPP227	1
2	WELD ON PLATE	P001.448	1	P001.448	1	P001.448	1
3	EYE BOLT	ZFAS131	1	ZFAS131	1	ZFAS131	1
4	WIRE GRIP	ZGPP228	4	ZGPP228	4	ZGPP228	4
5	HAND BRAKE CABLE	P001.622	1	P001.622	1	P001.622	1
6	M10 PLAIN NUT	ZFAS05	2	ZFAS05	2	ZFAS05	2
7	M12X30 SETSCREW ZP	ZFAS10	2	ZFAS10	2	ZFAS10	2
8	M12 NYLOCK NUT	ZFAS22	2	ZFAS22	2	ZFAS22	2

REAR DISCHARGE VALVE HYDRAULIC ASSEMBLY

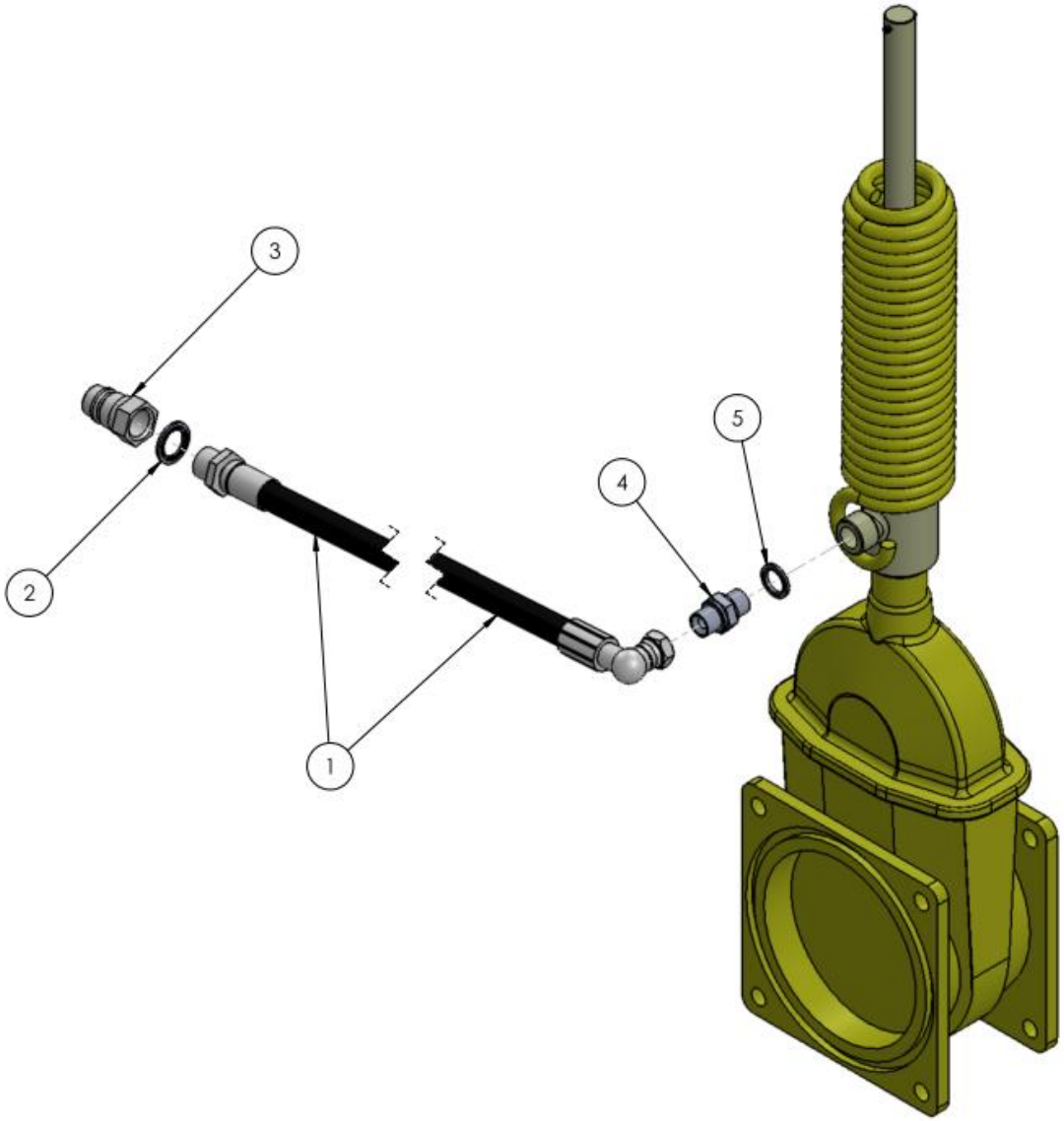

SEE TABLE NO: 007

TABLE NO: 007 ST1100N,ST1300N and ST1600N REAR DISCHARGE HYDRAULIC ASSEMBLY							
ITEM NO	DESCRIPTION	ST1100		ST1300		ST1600N	
		CODE	QTY	CODE	QTY	CODE	QTY
1	HYDRAULIC HOSE (Includes Male fitting)	ZHYD57	1	ZHYD57	1	ZHYD57	1
2	DOWDY SEAL	ZHYD22	1	ZHYD22	1	ZHYD22	1
3	½" MALE PROBE	ZHYD26	1	ZHYD26	1	ZHYD26	1
4	3/8" x 3/8" MALE CONNECTOR	ZHYD03	1	ZHYD03	1	ZHYD03	1
5	3/8" DOWDY SEAL	ZHYD05	1	ZHYD05	1	ZHYD05	1

ST1100N NON RECESSED TANKER TVZ AXLE PART No. ZGPP17A

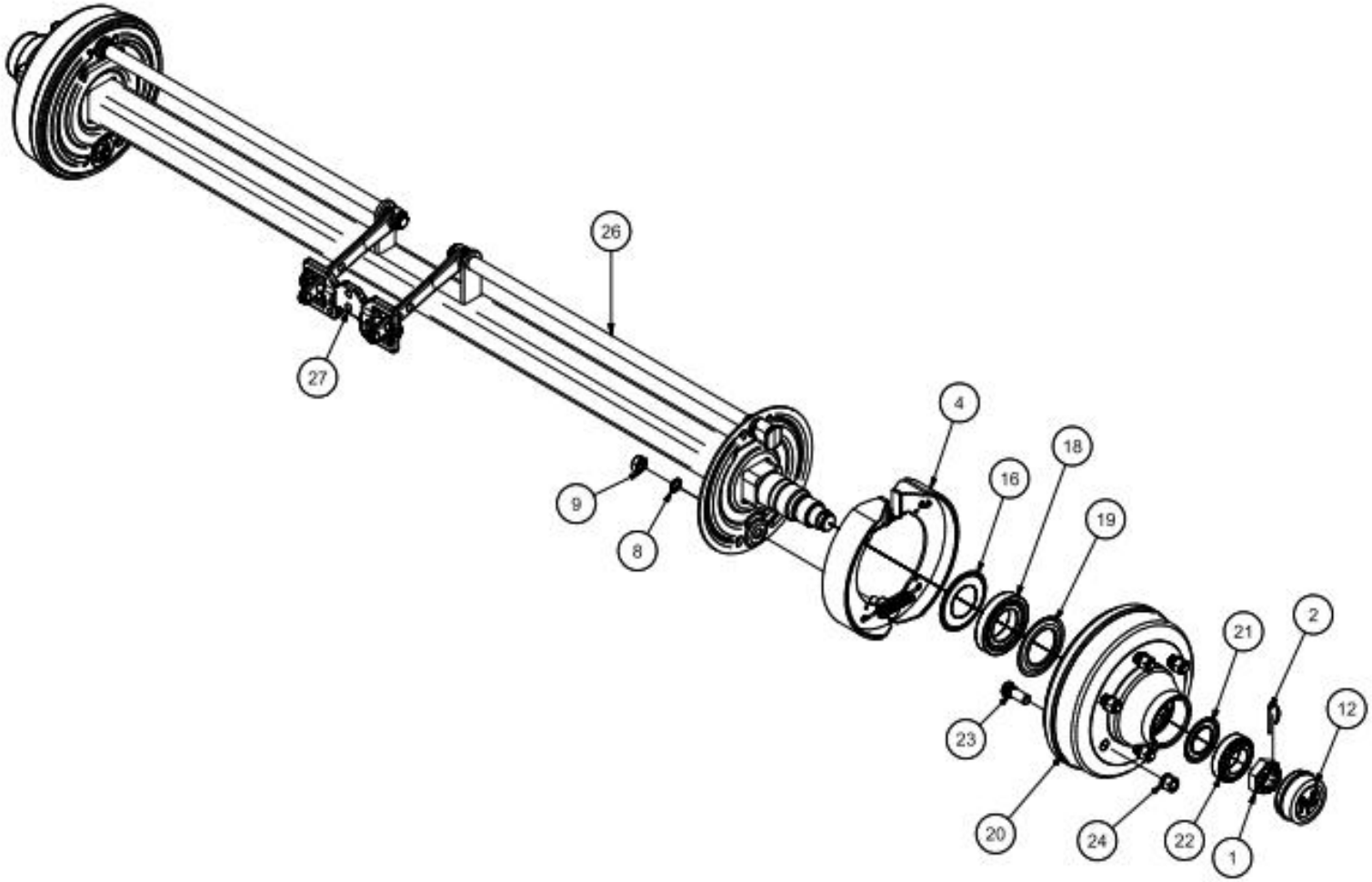

SEE TABLE NO: 008

TABLE NO: 008 ST1100N TVZ AXLE Part No: ZGPP17A			
		ST1100N	
ITEM NO	DESCRIPTION	CODE	QTY
1	CROWN NUT M39x1.5	57539B2	2
2	SPRING PIN FOR NUT	58205	2
4	BRAKE SHOE 300X060	9FCA300ZO	2
8	SPRING WASHER	9800161	2
9	NUT M16X2.00	97116D1	2
12	DUST CAP 90mm	56109009	2
16	DUST SHIELD	5411201	2
18	BEARING	59130213	2
19	DUST SHIELD	5511201	2
20	DRUM	65L6NA01	2
21	INDUSTRIAL SEAL	5510901	2
22	BEARING	59132210	2
23	AXLE STUD 18mmx1.5mm	AX-18501.5	16
24	AXLE NUT 18mmx1.5mm	AX-181.5	16
26	CAM SHAFT	752263131019T	2
27	COMPENSATOR	768101	1

ST1300N & ST1600N NON RECESSED TANKER TVZ AXLE PART No. ZGPP17

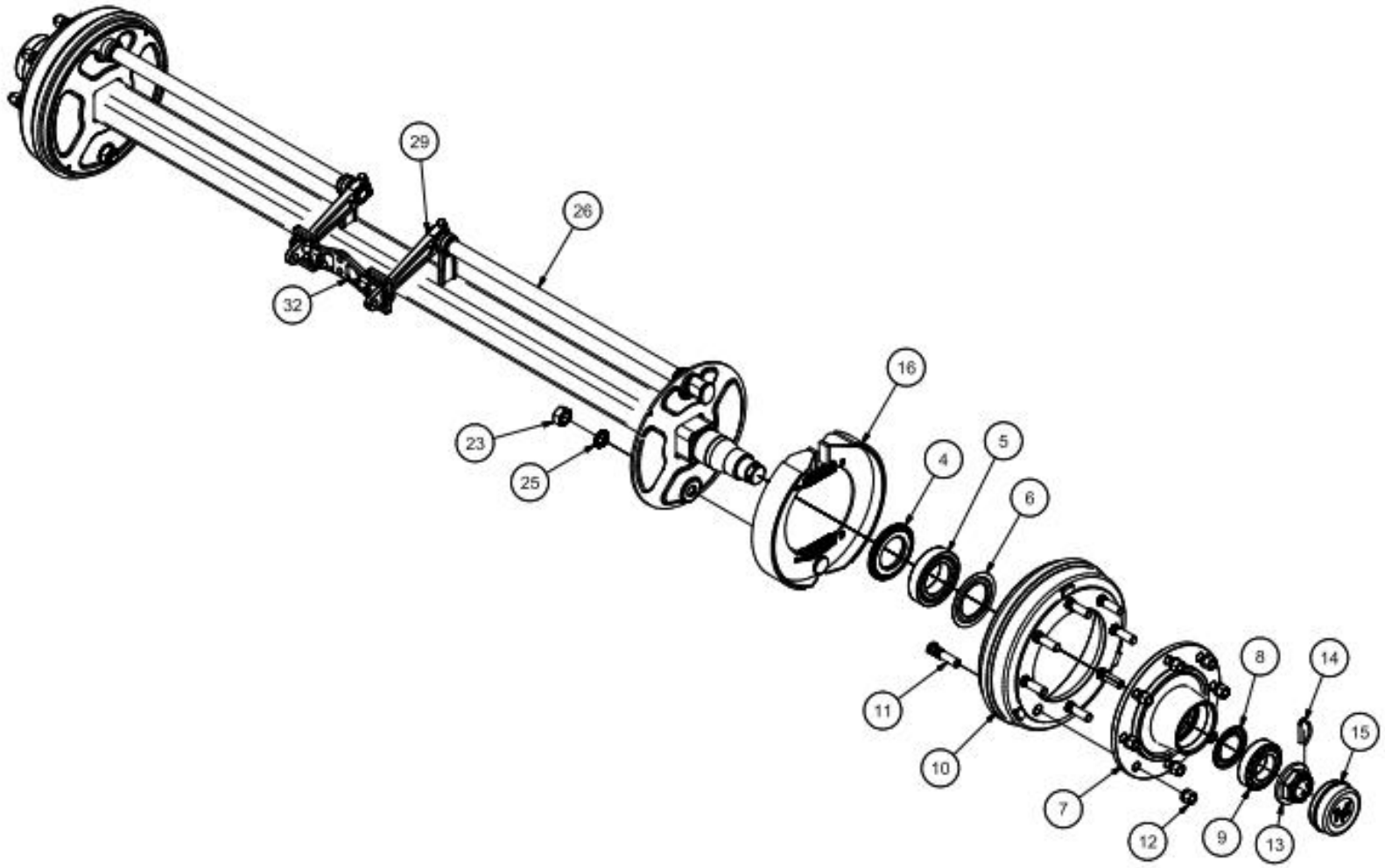

SEE TABLE NO: 009

TABLE NO: 009 ST1300N & ST1600N TVZ AXLE Part No: ZGPP17			
ITEM NO	DESCRIPTION	ST1300N / ST1600N	
		CODE	QTY
4	INDUSTRIAL SEAL	5441301	2
5	BEARING	59132215	2
6	DUST SHIELD	5511301	2
7	HUB	61L08110130150	2
8	DUST SHIELD	5530991	2
9	BEARING	59132212	2
10	DRUM	66LNF0803	2
11	AXLE STUD 18mmx1.5mm	AX-18501.5	16
12	AXLE NUT 18mmx1.5mm	AX-181.5	16
13	CROWN NUT M48x1.5	57548B5	2
14	SPRING PIN FOR NUT	58209	2
15	DUST CAP 110mm	56111009	2
16	BRAKE SHOE 350X060	9FCA350ZO	2
23	NUT M24X1.5	97124B1	2
25	TWIN WASHER	9800241	2
26	CAM SHAFT	753032C800	2
29	BRAKE LEVER	7613201	2
32	COMPENSATOR	768102	1

ST1600 & ST2000 RECESSED TANKER MAIN ASSEMBLY

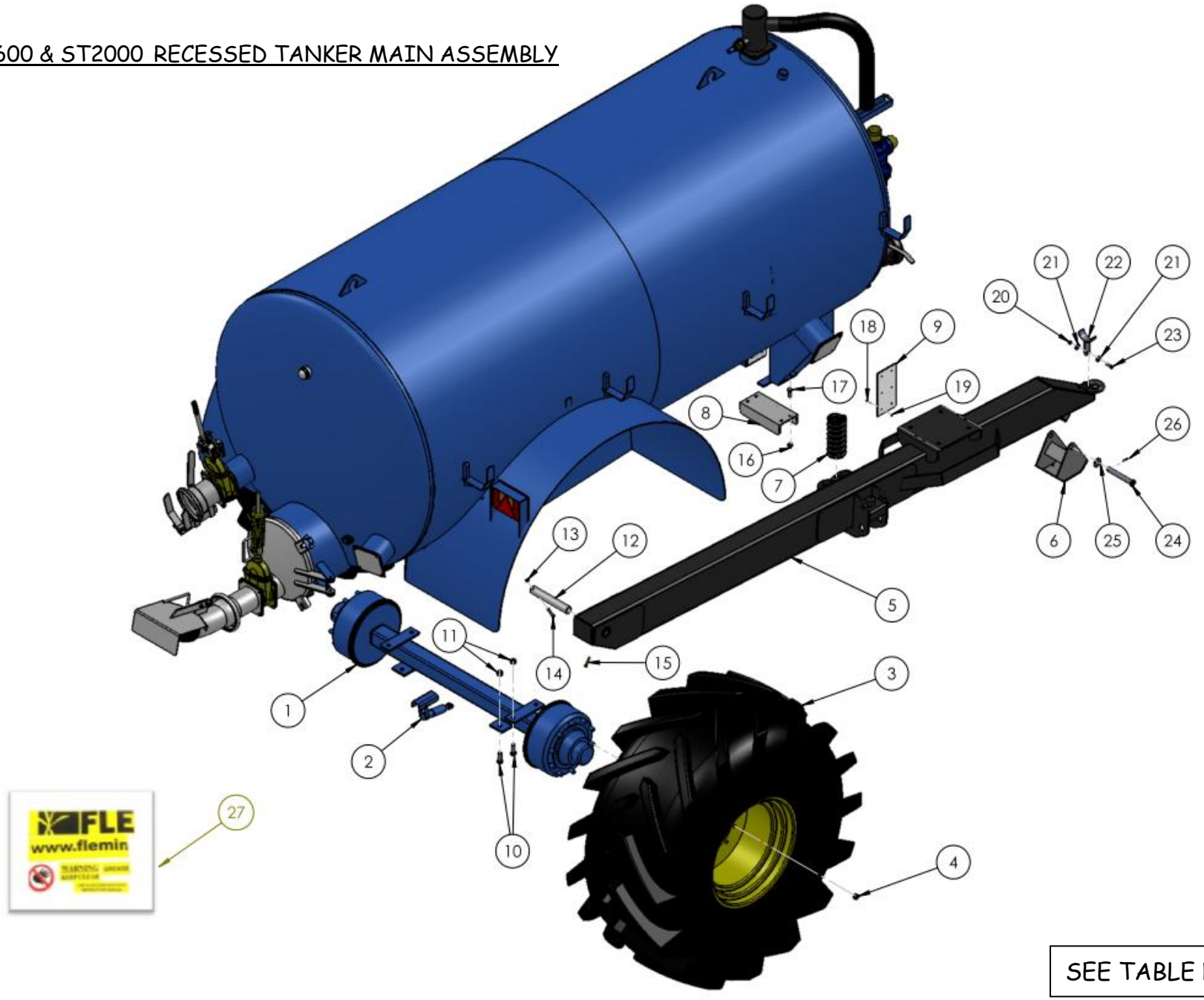

SEE TABLE NO: 010

TABLE NO: 010 ST1600 / ST2000 RECESSED TANKER MAIN ASSEMBLY					
		ST1600		ST2000	
ITEM NO	DESCRIPTION	CODE	QTY	CODE	QTY
1	BRAKED AXLE 110x110x180x450 10 STUD	ZTAN35A	1	ZTAN35A	1
1	BRAKED AXLE 100x100x180x450 10 STUD (OLD)	ZTAN35	1	ZTAN35	1
2	BRAKE ASSEMBLY	ZGPP124	2	ZGPP124	2
3	28.1 R26/10 WHEEL COMPLETE	ZTAN34	2	ZTAN34	2
4	WHEEL NUT (including spring washer)	AX-312F025	20	AX-312F025	20
5	DRAWBAR	P001.610	1	P001.610	1
6	DRAWBAR STAND	P001.424	1	P001.424	1
7	DRAWBAR SPRING	ZSPR10	2	ZSPR10	2
8	DRAWBAR RETAINING BRACKET	P001.611	1	P001.611	1
9	DRAWBAR WEAR PLATE	ZMAC56	2	ZMAC56	2
10	M20X45 SET SCREW ZP	ZFAS12	8	ZFAS12	8
11	M20 NYLOCK NUT ZP	ZFAS24	8	ZFAS24	8
12	DRAWBAR PIVOT PIN	P001.612	1	P001.612	1
13	M12 NYLOCK NUT	ZFAS22	1	ZFAS22	1
14	M12x80 BOLT HT ZP	ZFAS47	1	ZFAS47	1
15	GREASE TUBE	ZGPP186	1	ZGPP186	1
16	M16 NYLOCK NUT	ZFAS23	4	ZFAS23	4
17	M16x45 SETSCREW ZP	ZFAS11	4	ZFAS11	4
18	M8x30 COUNTERSUNK BOLT ZP	ZFAS120	12	ZFAS120	12
19	M8 NYLOCK NUT	ZFAS55	12	ZFAS55	12
20	M12 NYLOCK NUT	ZFAS22	1	ZFAS22	1
21	M12 WASHER ZP	ZFAS45	2	ZFAS45	2
22	PTO SHAFT HOLDER	P001.314	1	P001.314	1
23	M12X40 SET SCREW ZP	ZFAS51	1	ZFAS51	1
24	DRAWBAR STAND PIN	ZMAC73	1	ZMAC73	1
25	1” WASHER ZP	ZFAS49	1	ZFAS49	1
26	M6x40 LINCH PIN	ZFAS34	1	ZFAS34	1
27	STICKER KIT	P001.558	1	P001.559	1

CRANKED AXLE TANKER MAIN ASSEMBLY

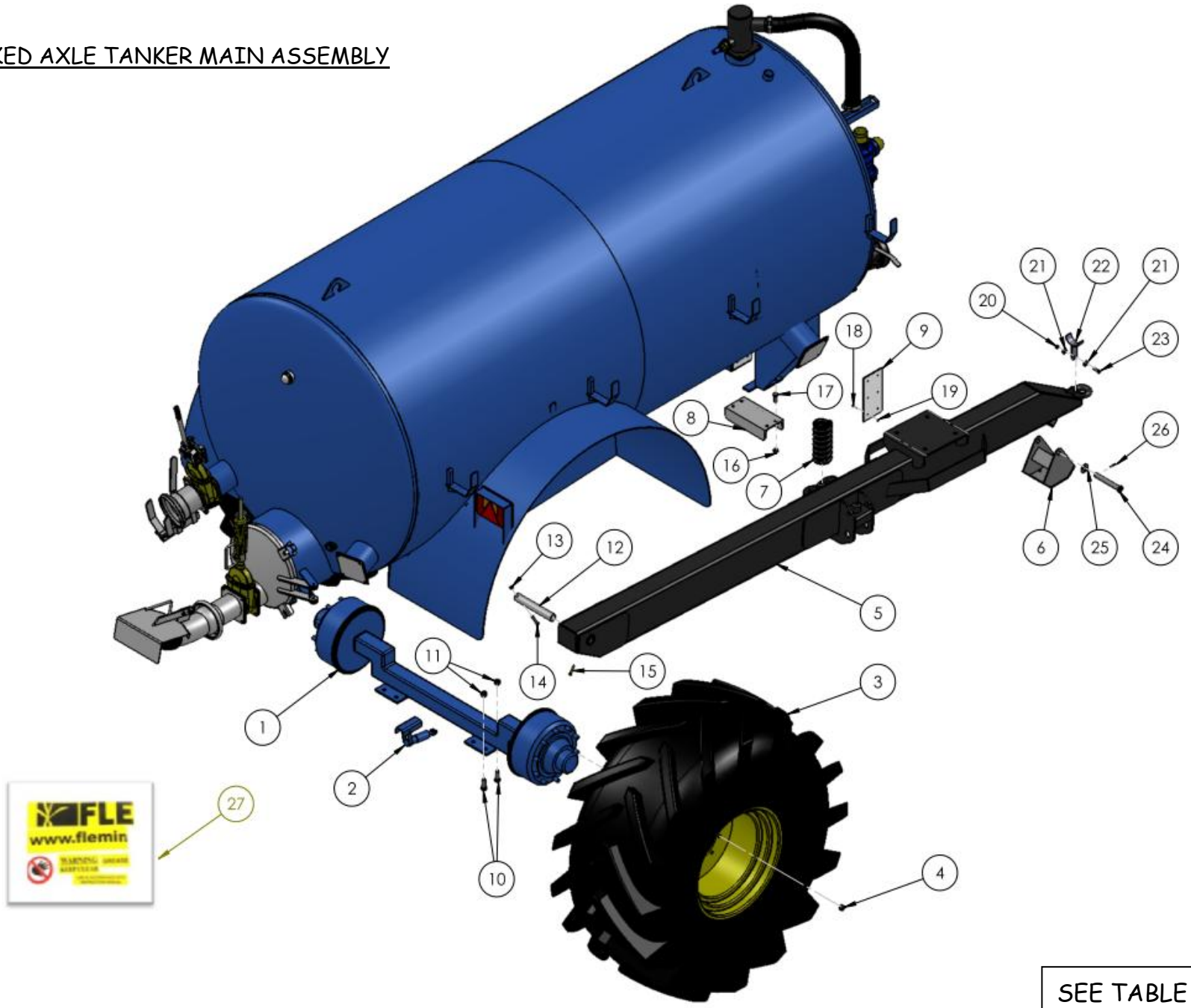

SEE TABLE NO: 011

TABLE NO: 011 ST2000C / ST2300 & ST2400 RECESSED TANKER MAIN ASSEMBLY							
		ST2000C		ST2300		ST2400	
ITEM	DESCRIPTION	CODE	QTY	CODE	QTY	CODE	QTY
1	CRANKED AXLE 10 STUD	ZTAN54	1	ZTAN54	1	ZTAN54	1
2	BRAKE ASSEMBLY	ZGPP124	2	ZGPP124	2	ZGPP124	2
3	28.1 R26/10 WHEEL COMPLETE	ZTAN34	2				
3	R32/30.5 / WHEEL COMPLETE			ZTAN34C	2	ZTAN34C	2
4	WHEEL NUT (including spring washer)	AX-312F025	20	AX-312F025	20	AX-312F025	20
5	DRAWBAR	P001.610	1	P001.610	1	P001.610	1
6	DRAWBAR STAND	P001.424	1	P001.424	1	P001.424	1
7	DRAWBAR SPRING	ZSPR10	2	ZSPR10	2	ZSPR10	2
8	DRAWBAR RETAINING BRACKET	P001.611	1	P001.611	1	P001.611	1
9	DRAWBAR WEAR PLATE	ZMAC56	2	ZMAC56	2	ZMAC56	2
10	M20X45 SET SCREW ZP	ZFAS12	8	ZFAS12	8	ZFAS12	8
11	M20 NYLOCK NUT ZP	ZFAS24	8	ZFAS24	8	ZFAS24	8
12	DRAWBAR PIVOT PIN	P001.612	1	P001.612	1	P001.612	1
13	M12 NYLOCK NUT	ZFAS22	1	ZFAS22	1	ZFAS22	1
14	M12x80 BOLT HT ZP	ZFAS47	1	ZFAS47	1	ZFAS47	1
15	GREASE TUBE	ZGPP186	1	ZGPP186	1	ZGPP186	1
16	M16 NYLOCK NUT	ZFAS23	4	ZFAS23	4	ZFAS23	4
17	M16x45 SETSCREW ZP	ZFAS11	4	ZFAS11	4	ZFAS11	4
18	M8x30 COUNTERSUNK BOLT ZP	ZFAS120	12	ZFAS120	12	ZFAS120	12
19	M8 NYLOCK NUT	ZFAS55	12	ZFAS55	12	ZFAS55	12
20	M12 NYLOCK NUT	ZFAS22	1	ZFAS22	1	ZFAS22	1
21	M12 WASHER ZP	ZFAS45	2	ZFAS45	2	ZFAS45	2
22	PTO SHAFT HOLDER	P001.314	1	P001.314	1	P001.314	1
23	M12X40 SET SCREW ZP	ZFAS51	1	ZFAS51	1	ZFAS51	1
24	DRAWBAR STAND PIN	ZMAC73	1	ZMAC73	1	ZMAC73	1
25	1” WASHER ZP	ZFAS49	1	ZFAS49	1	ZFAS49	1
26	M6x40 LINCH PIN	ZFAS34	1	ZFAS34	1	ZFAS34	1
27	STICKER KIT	P001.560	1	P001.561	1	P001.562	1

RECESSED TANKER FRONT VIEW

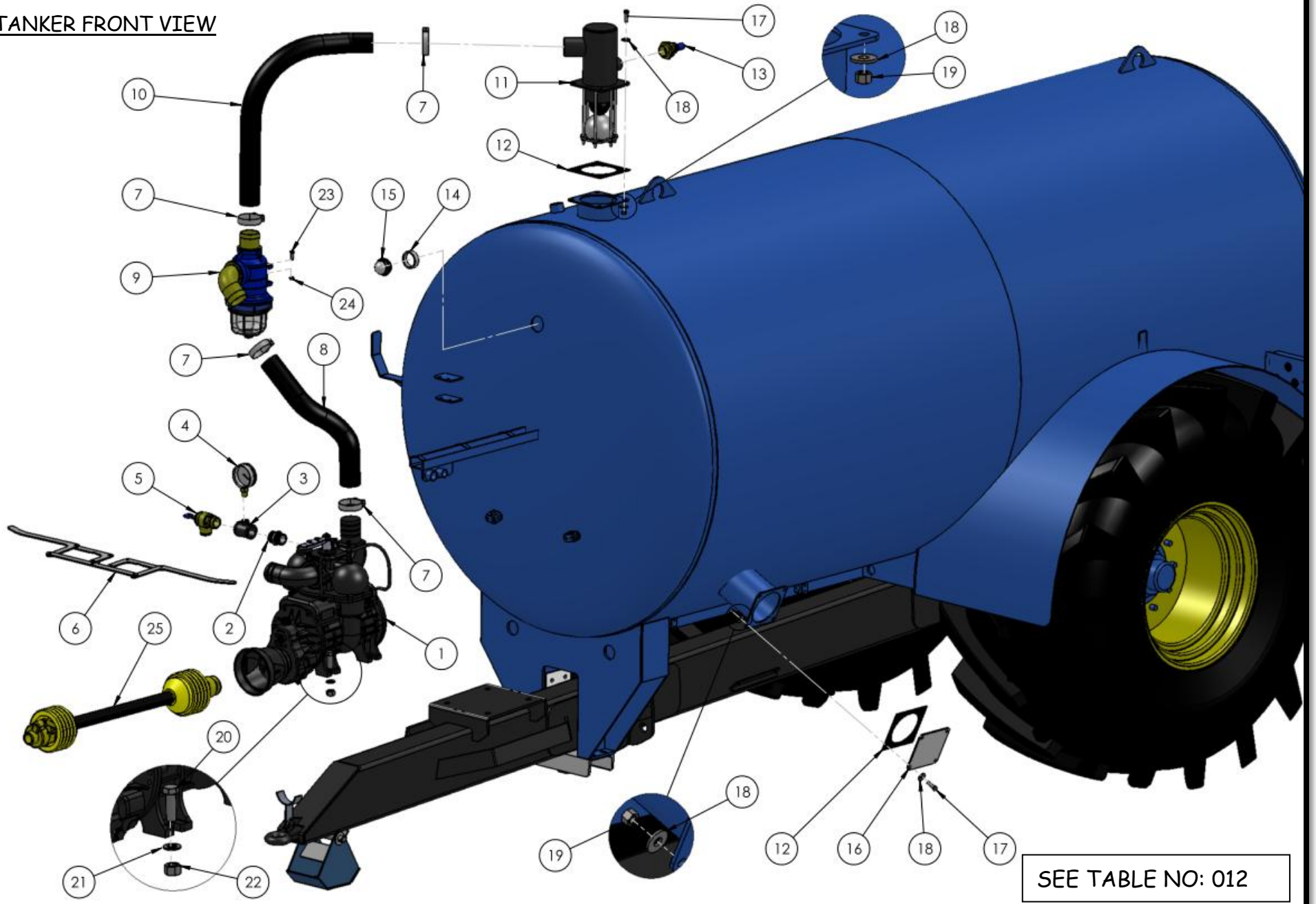

SEE TABLE NO: 012

TABLE NO: 012 ST1600,ST2000,ST2000C,ST2300 and ST2400 FRONT VIEW			
		ALL SIZES	
ITEM NO	DESCRIPTION	CODE	QTY
1	**MEC8000M 8,000 LITRE PUMP (ST1600)**	ZTAN01	1
1	MEC11000 11,000 LITRE PUMP	ZTAN02	1
2	1 ½" HEX NIPPLE	ZTAN05	1
3	GALV T 1 ½" x 1 ½" x ½"	ZTAN06	1
4	PRESSURE GAUGE	ZTAN07	1
5	1 ½" SAFETY VALVE	ZTAN04	1
6	HANDLE ASSEMBLY (ST1600)	P001.600	1
6	HANDLE ASSEMBLY (ST2000-ST2400)	P001.624	1
7	3" HOSE CLIP	ZTAN32	4
8	80mm SUCTION HOSE	P001.625	1
9	SYPHON	ZTAN08	1
10	80mm SUCTION HOSE	P001.626	1
11	TOP TRAP	PAGE 43-48	1
12	GASKET	ZTAN23	2
13	1 ½" DECOMPRESSION VALVE	ZTAN03	1
14	3" SIGHT GLASS RING	ZTAN38	2
15	3" SIGHT GLASS	ZTAN39	2
16	6" BLANKING PLATE	ZPPA509	1
17	M12x40 SETSCREWS ZP	ZFAS51	8
18	M12 WASHER ZP	ZFAS45	16
19	M12 NYLOCK NUT ZP	ZFAS22	8
20	M20x60 BOLT ZP	ZFAS127	4
21	M20 WASHER ZP	ZFAS39	8
22	M20 NYLOCK NUT	ZFAS24	4
23	M10x30 SETSCREW ZP	ZFAS07	4
24	M10 NYLOCK NUT	ZFAS20	4
25	PTO SHAFT	ZGPP114	1

RECESSED TANKER REAR VIEW

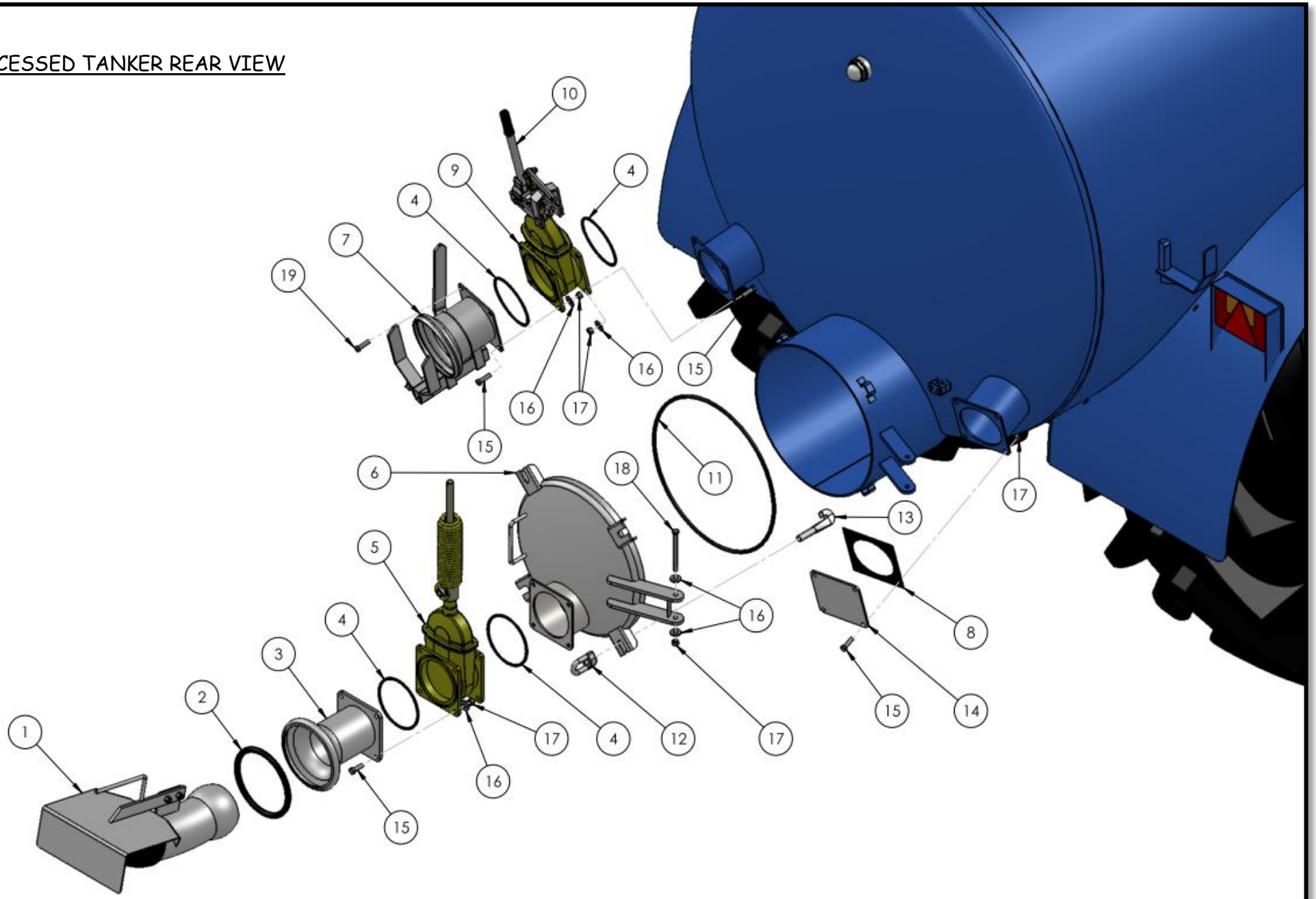

SEE TABLE NO: 013

TABLE NO: 013 ST1600,ST2000,ST2000C,ST2300 and ST2400 REAR VIEW			
		ALL SIZES	
ITEM NO	DESCRIPTION	CODE	QTY
1	SPLASH PLATE FEMALE	ZTAN14	1
2	O-RING	P001.609	1
3	MALE FLANGE COUPLING	ZTAN12	1
4	GATE VALVE O-RING	VT-6080500	4
5	6” GATE VALVE c/w RAM	ZTAN15A	1
6	TANKER HATCH	P001.607	1
7	6” QUICK ATTACH PERROT	ZTAN11	1
8	FLANGE GASKET	ZTAN23	2
9	6” GATE VALVE	ZTAN15	1
10	GATE VALVE HANDLE	ZTAN16	1
11	TANKER HATCH O-RING	P001.608	1
12	TANKER HOOK NUT	ZTAN25	4
13	TANKER HOOK	ZTAN24A	4
	COMPLETE TANKER HOOK	ZTAN24	4
14	6” BLANKING PLATE	ZPPA509	1
15	M12x40 SETSCREWS ZP	ZFAS51	8
16	M12 WASHER ZP	ZFAS45	16
17	M12 NYLOCK NUT ZP	ZFAS22	8
18	M12x140 BOLT ZP	ZFAS119	1
19	M12x35 SETSCREW ZP	ZFAS137	8

RECESSED TANKER LIGHTS

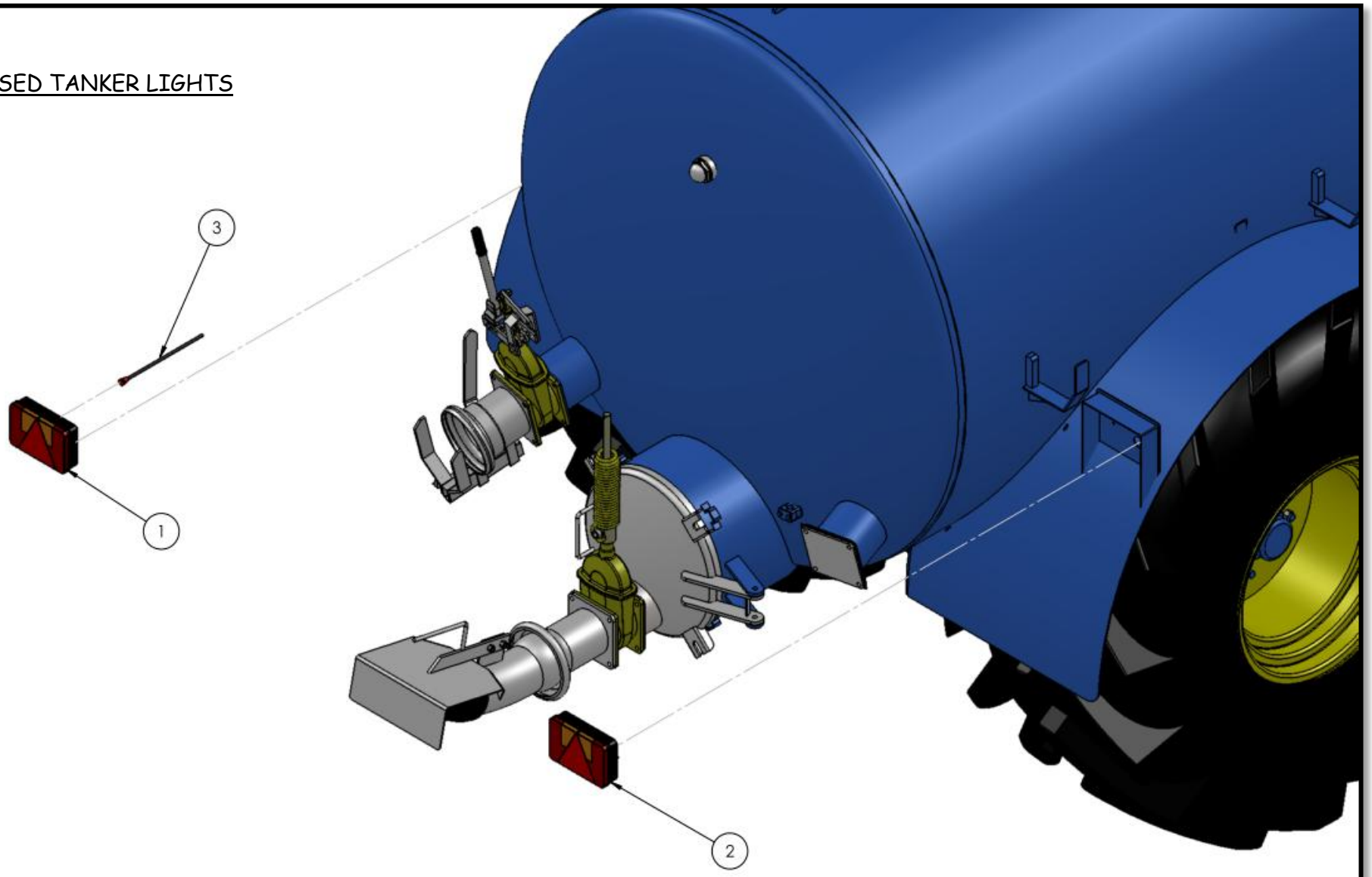

SEE TABLE NO: 014

TABLE NO: 014 ST1600,ST2000,ST2000C,ST2300 and ST2400 LIGHTS			
		ALL SIZES	
ITEM NO	DESCRIPTION	CODE	QTY
1	LHD TAIL LIGHT	ZGPP180	1
2	RHD TAIL LIGHT	ZGPP181	1
3	8M WIRING LOOM	ZGPP179	1
	LHD TAIL LIGHT LENSE	LCTR8L	1
	RHD TAIL LIGHT LENSE	LCTR8R	1

RECESSED TANKER BRAKE ASSEMBLY

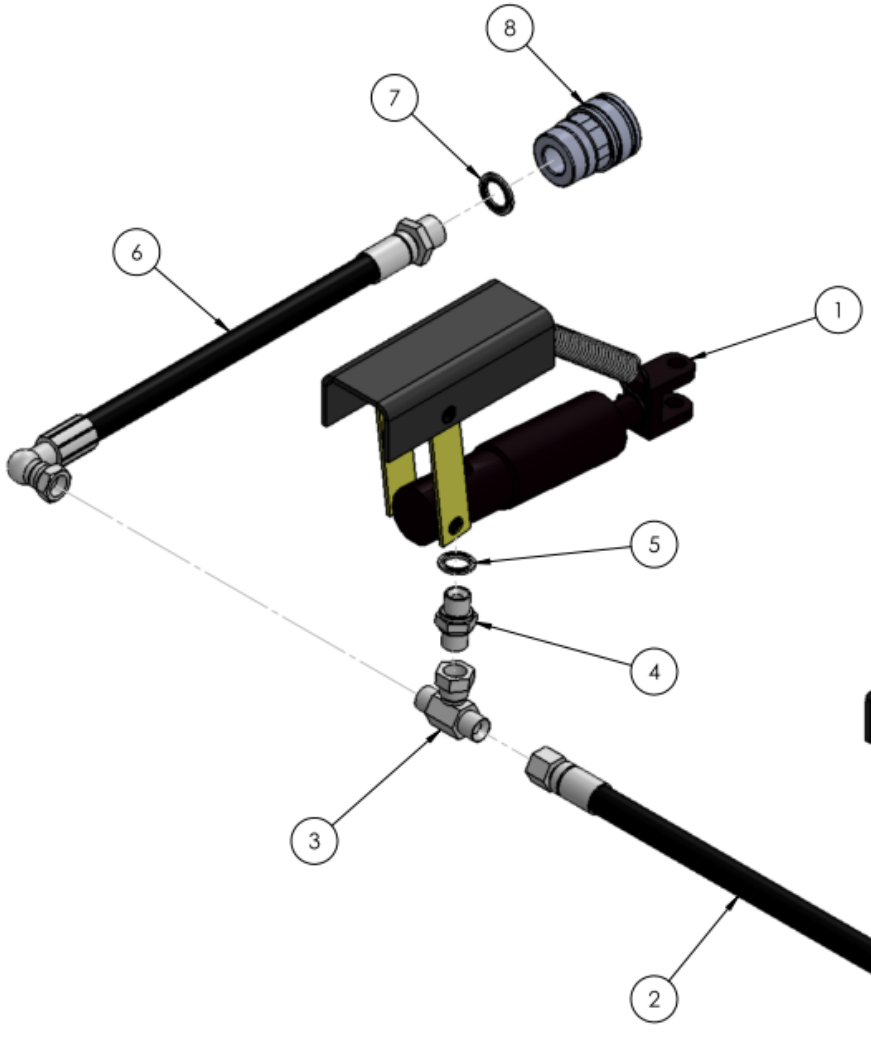

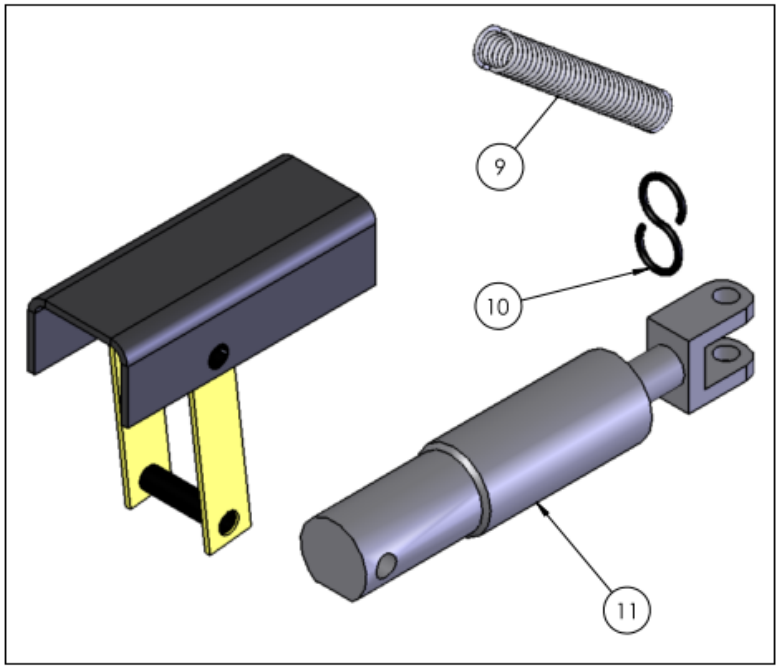

SEE TABLE NO: 015

TABLE NO: 015 ST1600,ST2000,ST2000C,ST2300 and ST2400 BRAKE ASSEMBLY			
		ALL SIZES	
ITEM NO	DESCRIPTION	CODE	QTY
1	BRAKE ASSEMBLY	ZGPP124	2
2	HYDRAULIC HOSE	ZGPP88	1
3	T CONNECTOR	ZHYD37	2
4	3/8” MALE CONNECTOR	ZHYD03	2
5	3/8” BONDED SEAL	ZHYD05	2
6	HYDRAULIC HOSE c/w BRAKE COUPLING	ZHYD47	1
7	½” BONDED SEAL	ZHYD22	1
8	BRAKE COUPLING	ZHYD25	1
9	RETURN SPRING	ZSPR11	1
10	S CLIP	P001.354	1
11	REPLACEMENT BRAKE CYLINDER	ZGPP73	1

RECESSED TANKER HAND BRAKE ASSEMBLY

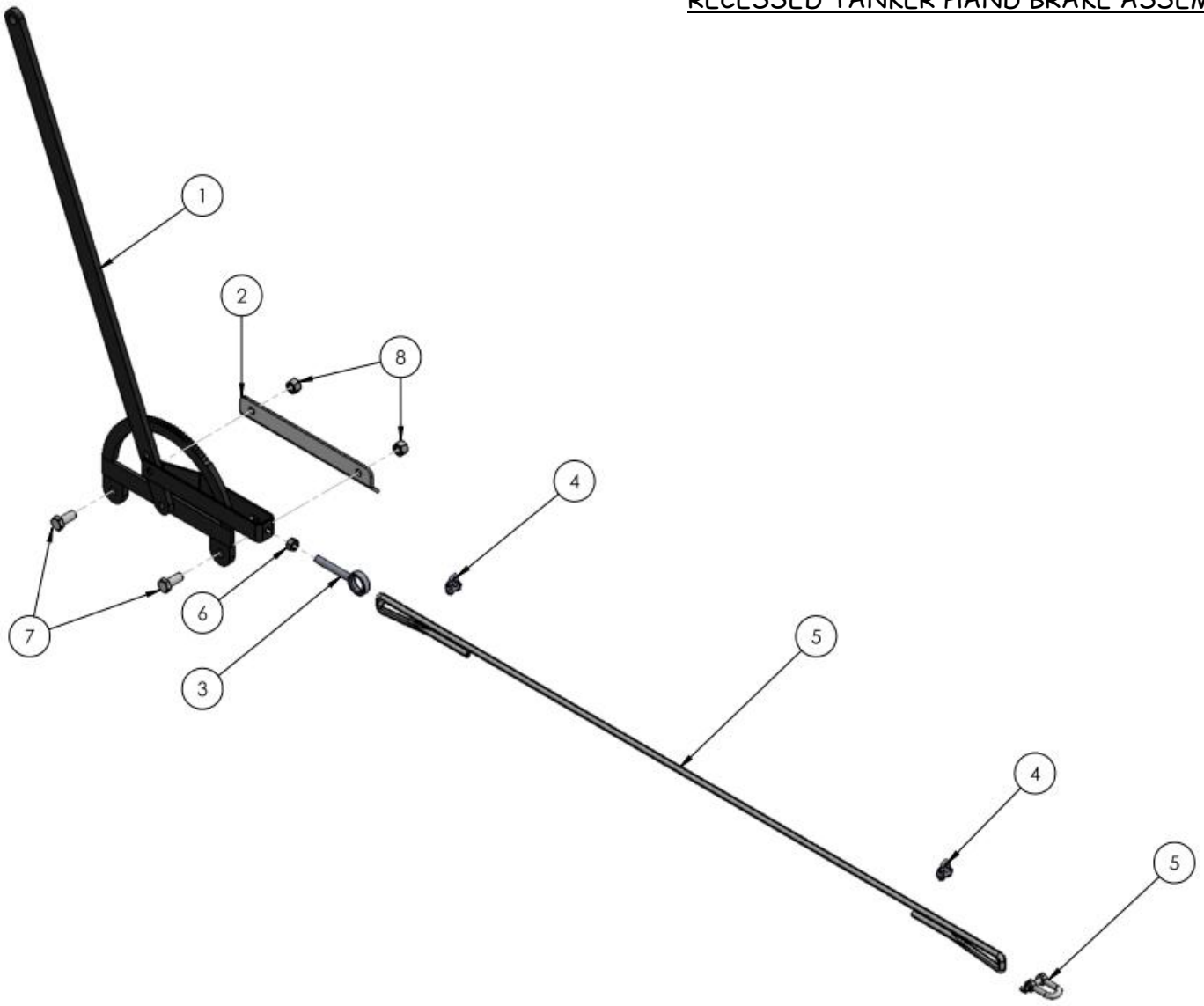

SEE TABLE NO: 016

TABLE NO: 016 ST1600,ST2000,ST2000C,ST2300 and ST2400 HAND BRAKE ASSEMBLY			
		ALL SIZES	
ITEM NO	DESCRIPTION	CODE	QTY
1	HAND BRAKE LEVER	ZGPP227	1
2	WELD ON PLATE	P001.448	1
3	EYE BOLT	ZFAS131	1
4	WIRE GRIP	ZGPP228	4
5	HAND BRAKE CABLE	P001.623	1
6	M10 PLAIN NUT	ZFAS05	2
7	M12X30 SETSCREW ZP	ZFAS10	2
8	M12 NYLOCK NUT	ZFAS22	2

RECESSED TANKER REAR DISCHARGE VALVE HYDRAULIC ASSEMBLY

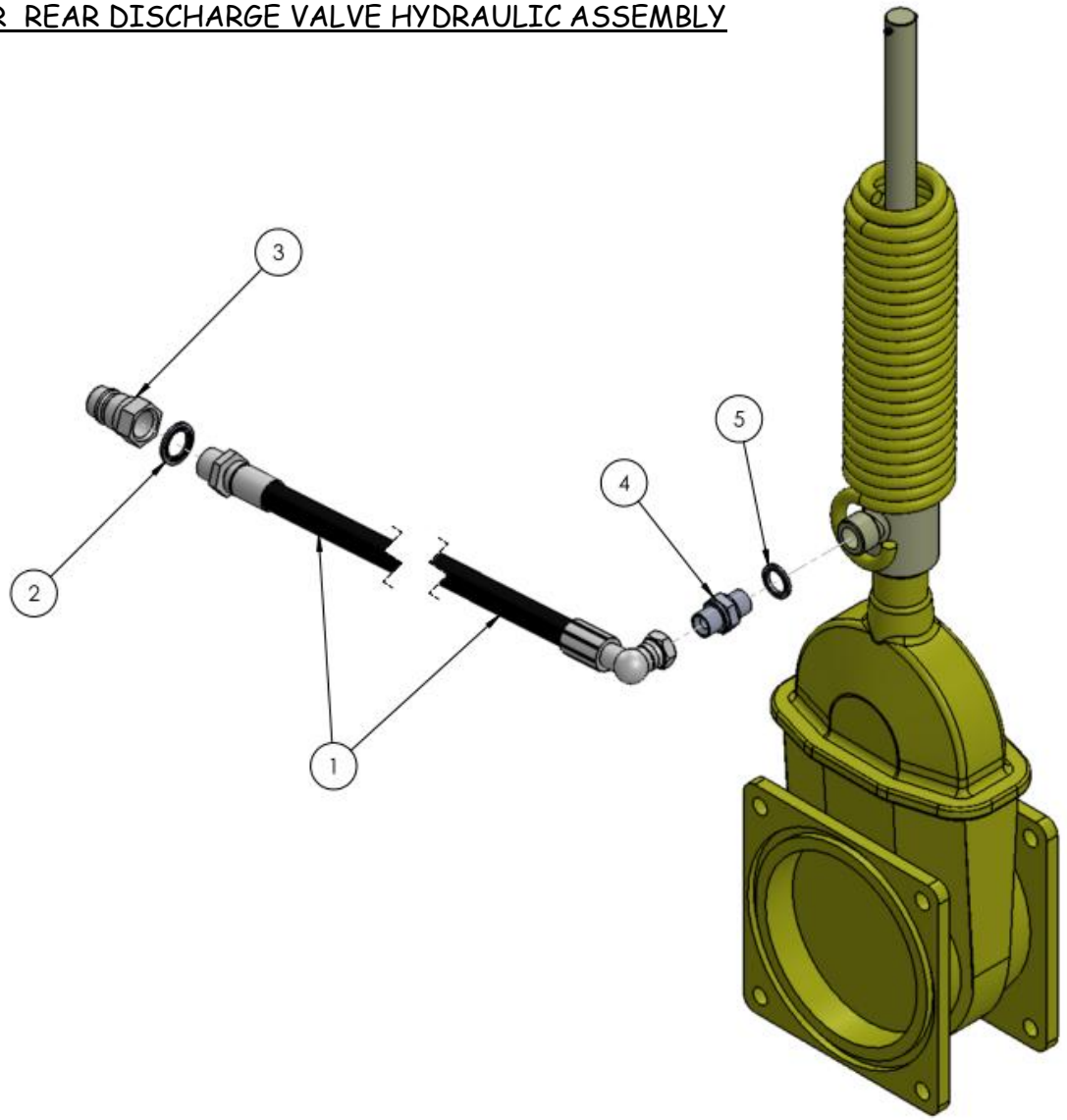

SEE TABLE NO: 017

TABLE NO: 017 ST1600,ST2000,ST2000C,ST2300 and ST2400 HYD ASSEMBLY			
		ALL SIZES	
ITEM NO	DESCRIPTION	CODE	QTY
1	HYDRAULIC HOSE	ZHYD54	1
2	½" BONDED SEAL	ZHYD22	1
3	½" MALE PROBE	ZHYD26	1
4	3/8" MALE CONNECTOR	ZHYD03	1
5	3/8" BONDED SEAL	ZHYD05	1

ST1600 and ST2000 TANKER TVZ AXLE PART No. ZTAN35A

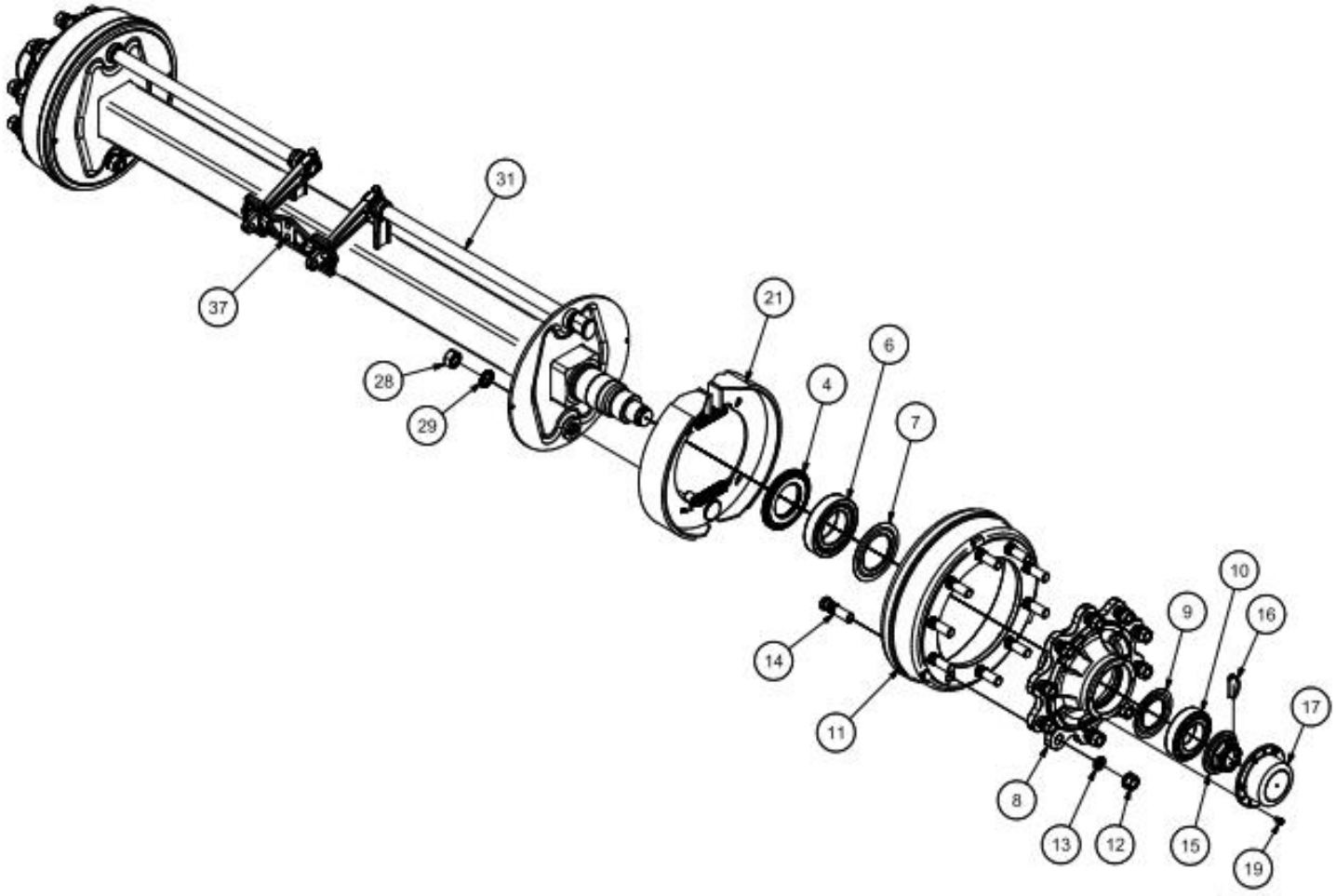

SEE TABLE NO: 018

TABLE NO: 018 ST1600 & ST2000 TVZ AXLE Part No: ZTAN35A			
ITEM NO	DESCRIPTION	ST1600 / ST2000	
		CODE	QTY
4	INDUSTRIAL SEAL	5441501	2
6	BEARING	59132217	2
7	DUST SHIELD	5511502	2
8	HUB	61L1UI002	2
9	DUST SHIELD	5511251	2
10	BEARING	59132214	2
11	DRUM	66LTG1001	2
12	AXLE NUT 22mmx1.5mm	AX-312F025	20
13	SPRING WASHER	574221	20
14	AXLE STUD 22mmx1.5mm	AX-309F023	20
15	CROWN NUT M48x1.5	57548B6	2
16	SPRING PIN FOR NUT	58209	2
17	DUST CAP 125mm	56112516	2
19	SOCKET HEAD SCREW	96308A0101	12
21	BRAKE SHOE 400X080	9FCA400ZO	2
28	NUT M24X1.5	97124B1	2
29	TWIN WASHER	9800241	2
31	CAM SHAFT	753032C700	2
37	COMPENSATOR	768102	1

ST1600 and ST2000 TANKER TVZ AXLE PART No. ZTAN35

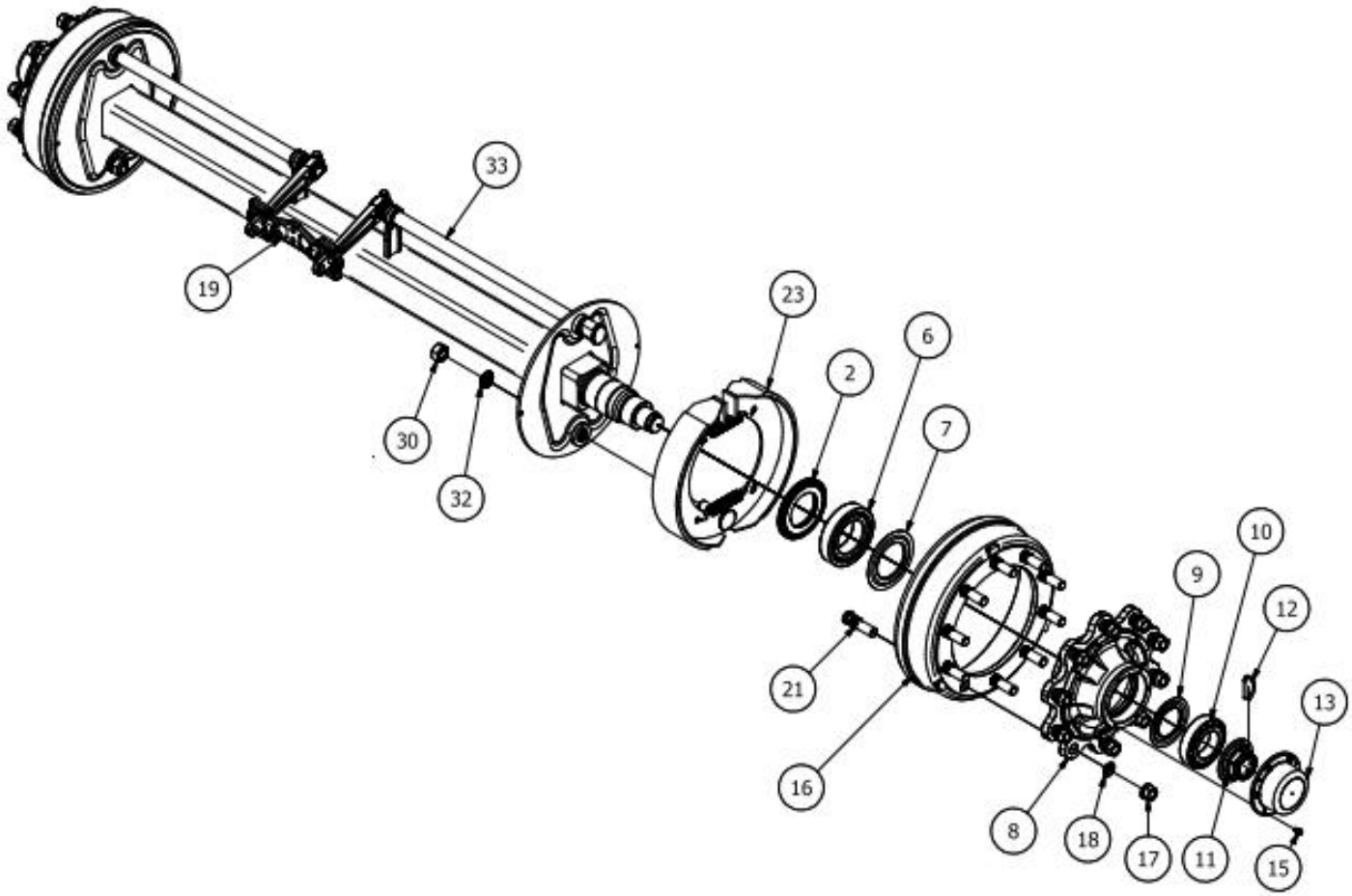

SEE TABLE NO: 019

TABLE NO: 019 ST1600 & ST2000 TVZ AXLE Part No: ZTAN35 (OLD VERSION)			
		ST1600 / ST2000	
ITEM NO	DESCRIPTION	CODE	QTY
2	INDUSTRIAL SEAL	5441501	2
6	BEARING	59132217	2
7	DUST SHIELD	5511502	2
8	HUB	61L1UI002	2
9	DUST SHIELD	5511251	2
10	BEARING	59132214	2
11	CROWN NUT M48x1.5	57548B6	2
12	SPRING PIN FOR NUT	58209	2
13	DUST CAP 125mm	56112516	2
15	SOCKET HEAD SCREW	96308A0101	12
16	DRUM	66LTG1001	2
17	AXLE NUT 22mmx1.5mm	AX-312F025	20
18	SPRING WASHER	574221	20
19	COMPENSATOR	768102	1
21	AXLE STUD 22mmx1.5mm	AX-309F023	20
23	BRAKE SHOE 400X080	9FCA400ZO	2
30	NUT M24X1.5	97124B1	2
32	TWIN WASHER	9800241	2
33	CAM SHAFT	753032C700	2

CRANKED AXLE ASSEMBLY PART No. ZTAN54

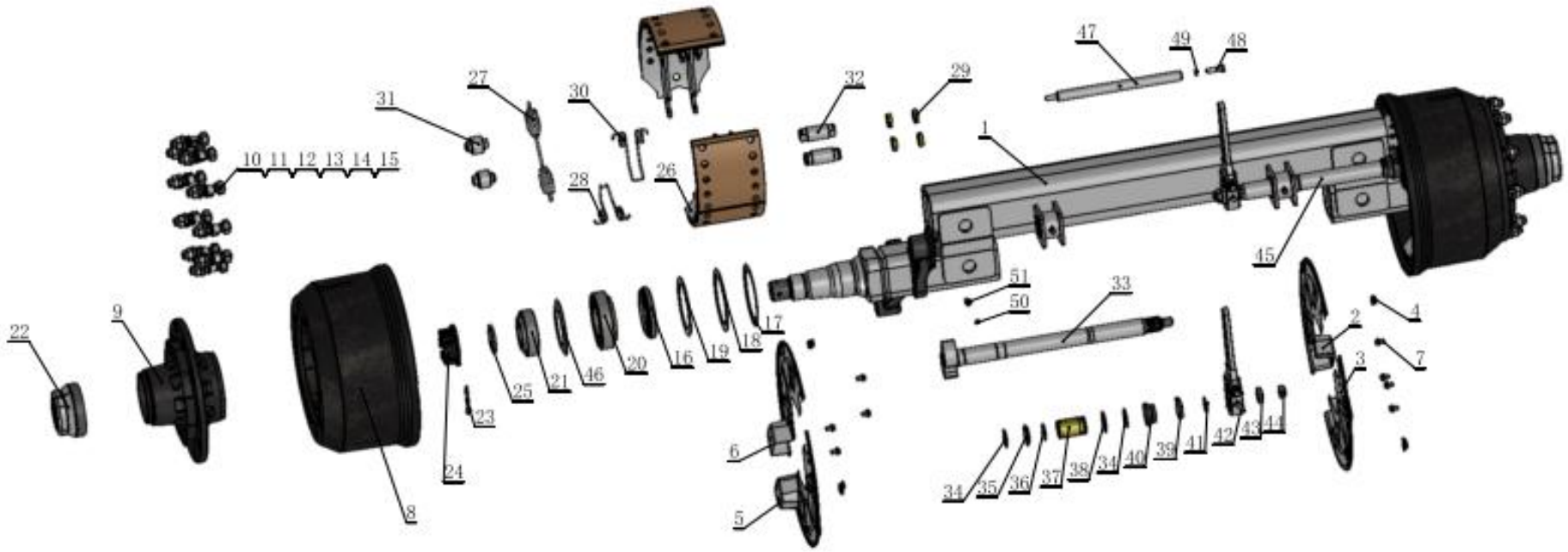

SEE TABLE NO: 020

TABLE NO: 020 CRANKED AXLE ASSEMBLY (Part No ZTAN54)			
		ALL MODELS	
ITEM NO	DESCRIPTION	CODE	QTY
1	Axle shaft	HS14E1012-01	
2	Dust Cover	HS12E1014-02A-1	
3	Dust Cover	HS12E1014-02A-2	
4	Bush for dust cover hole	HS12A1-02A-3	
5	Dust Cover	HS12E1014-02B-1	
6	Dust Cover	HS12E1014-02B-2	
7	Auto lock screw 2	HS12A1-03	
8	Brake drum(12T)	HS12A1-04-1(Q)	
9	Wheel hub(12T)	HS12A1-04-2	
10	Self-locking nut	HS12A1-04-3	
11	Wheel bolts	HS12A1-04-4	
12	Wheel screw locating bush	HS12A1-04-5	
13	Wheel locating pin	HS12A1-04-7	
14	Wheel Nut	HS12A1-04-8	
15	Washer	HS12A1-04-9	
16	Conical oil seal (12T)	HS12A1-05-1	
17	Oil seal washer (12T)	HS12A1-05-2	
18	Oil seal 1 (12T)	HS12A1-05-3	
19	Oil seal 2 (12T)	HS12A1-05-4	
20	Bearing	HS12A1-06	
21	Bearing	HS12A1-07	
22	Hub cap(HOS)	HS12A1-09	
23	Split Pin	HS12A1-10	
24	Castle Nut	HS12A1-11	
25	Washer	HS12A1-12	
26	Brake shoe assembly	HS12A1-13-1	
27	Brake shoe return spring	HS12A1-13-2	
28	Brake shoe retention spring 2	HS12A1-13-3	
29	Anchor pin bush	HS12A1-13-4	
30	Brake shoe retention spring 1	HS12A1-13-5	
31	Brake shoe roller assembly	HS12A1-13-6	

TABLE NO: 020 CRANKED AXLE ASSEMBLY (Part No ZTAN54)			
		ALL MODELS	
ITEM NO	DESCRIPTION	CODE	QTY
32	Brake shoe anchor pin	HS12A1-13-7	
33	Cam Shaft	HS14E1011-14-1(L)	
34	Elastic Ring	HS12A1-14-2	
35	Seal Ring (for camshaft)	HS12A1-14-3	
36	O-ring	HS12A1-14-4	
37	Bush	HS12A1-14-5	
38	Seal	HS12A1-14-6	
39	Circlip	HS12A1-14-8	
40	Dust Seal	HS12A1-14-11	
41	Circlip	HS12A1-14-12	
42	Slack Adjuster	HS12E1011-14-13	
43	(break camshaft)	HS12A1-14-14	
44	Lock Nut	HS12A1-14-15	
45	Cam-shaft (R620)	HS14E1011-14(R)	
46	Seal	HS12A1-16	
47	Thrust Rod	HS12E1002-17	
48	Hexagon Screw	HS12E1002-18	
49	Spring washer	HS12E1002-19	
50	M10x1 Grease Nipple	HS12A1-19	
51	M10x1 Grease Cap	HS12A1-21	

PRIMARY FLOAT VALVE ASSEMBLY

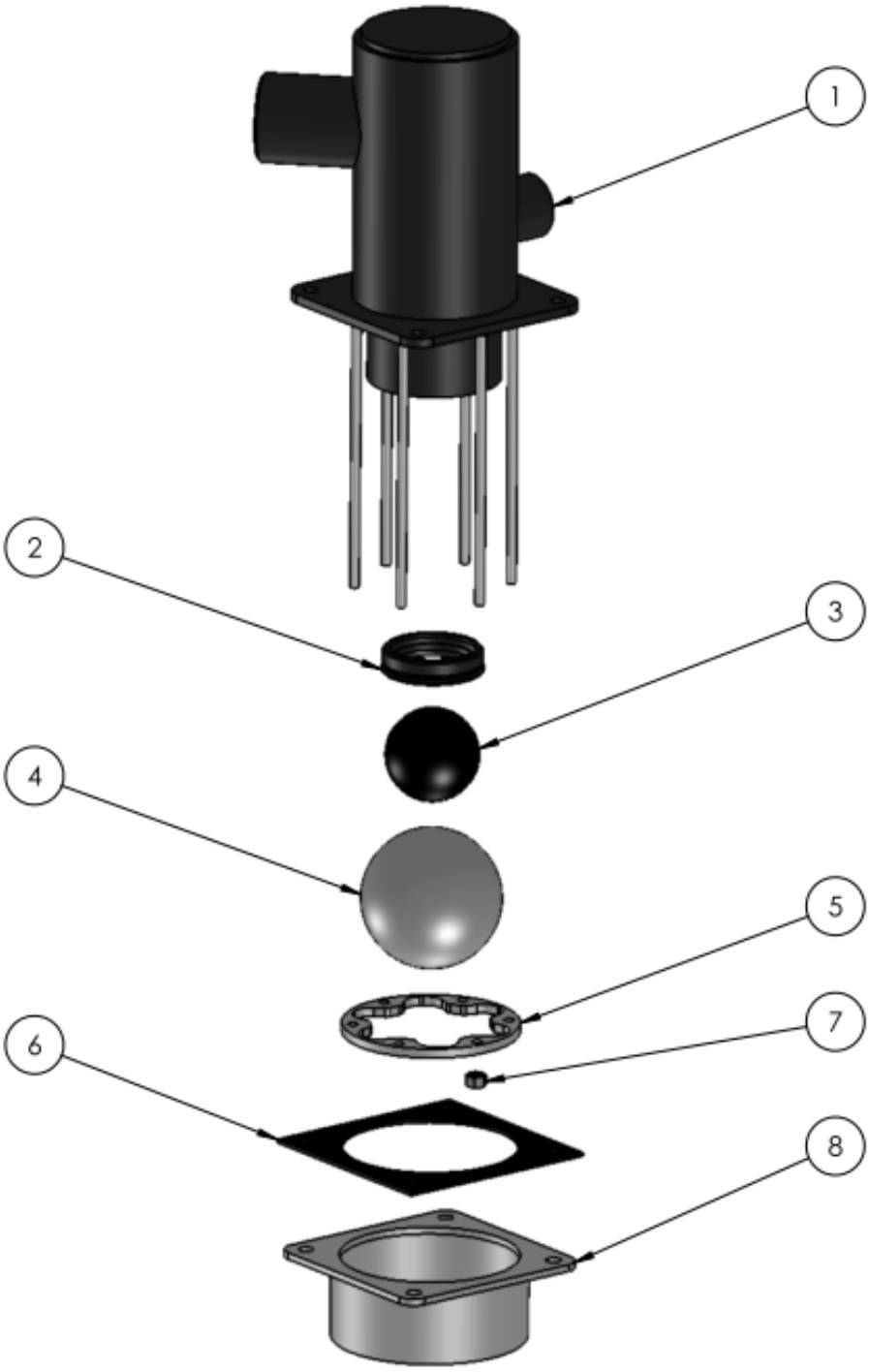

SEE TABLE NO: 021

TABLE NO: 021 PRIMARY FLOAT VALVE ASSEMBLY (CURRENT VERSION)			
		P001.614	
ITEM NO	DESCRIPTION	CODE	QTY
	COMPLETE FLOAT VALVE	P001.613	1
1	FLOAT VALVE BODY	P001.614	1
2	FLOAT VALVE SEAL	ZTAN53	1
3	80mm RUBBER BALL	ZTAN26A	1
4	120mm PLASTIC BALL	ZTAN27	1
5	FLOAT VALVE RETAINING PLATE	ZPPA656A	1
6	GASKET	ZTAN23	1
7	M8 STAINLESS STEEL NUT	ZFAS130	12
8	TANKER FLANGE (WELD ON)	P001.615	1

PRIMARY FLOAT VALVE ASSEMBLY (OLD VERSION)

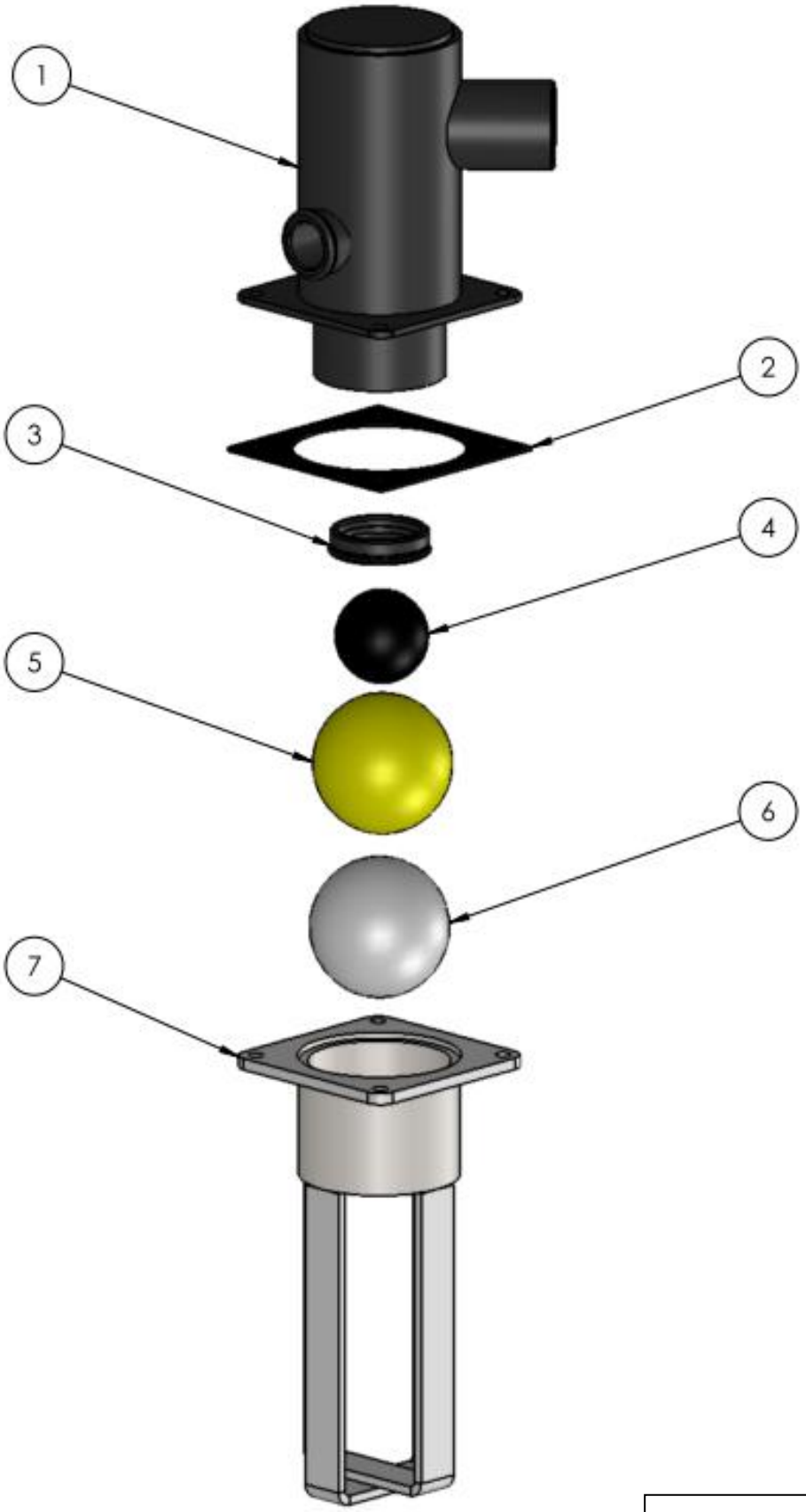

SEE TABLE NO: 022

TABLE NO: 022 PRIMARY FLOAT VALVE ASSEMBLY (OLD VERSION)			
		ALL MODELS	
ITEM NO	DESCRIPTION	CODE	QTY
1	FLOAT VALVE BODY	P001.616	1
2	GASKET	ZTAN23	1
3	FLOAT VALVE SEAL	ZTAN53	1
4	80mm RUBBER BALL	ZTAN26A	1
5	120mm PLASTIC BALL (YELLOW)	ZTAN47	1
6	120mm PLASTIC BALL	ZTAN27	1
7	TANKER FLANGE (WELD ON)	P001.617	1

PRIMARY FLOAT VALVE ASSEMBLY (OLD VERSION)

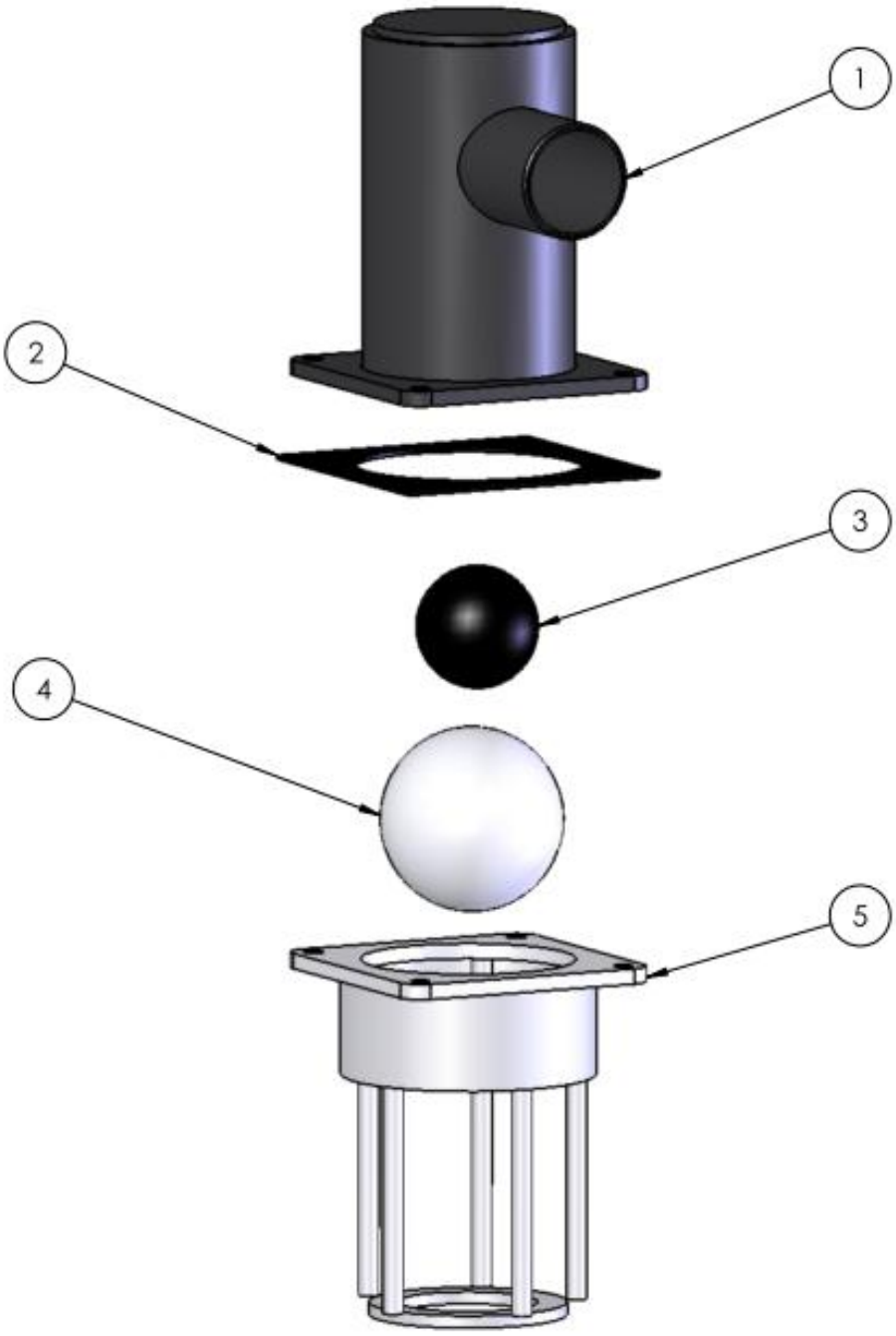

SEE TABLE NO: 023

TABLE NO: 023 PRIMARY FLOAT VALVE ASSEMBLY (OLD VERSION)			
		ALL MODELS	
ITEM NO	DESCRIPTION	CODE	QTY
1	FLOAT VALVE BODY	P001.618	1
2	GASKET	ZTAN23	1
3	80mm RUBBER BALL	ZTAN26A	1
4	120mm PLASTIC BALL	ZTAN27	1
5	TANKER FLANGE (WELD ON)	P001.619	1

SECONDARY TRAP ASSEMBLY PART No. ZTAN08

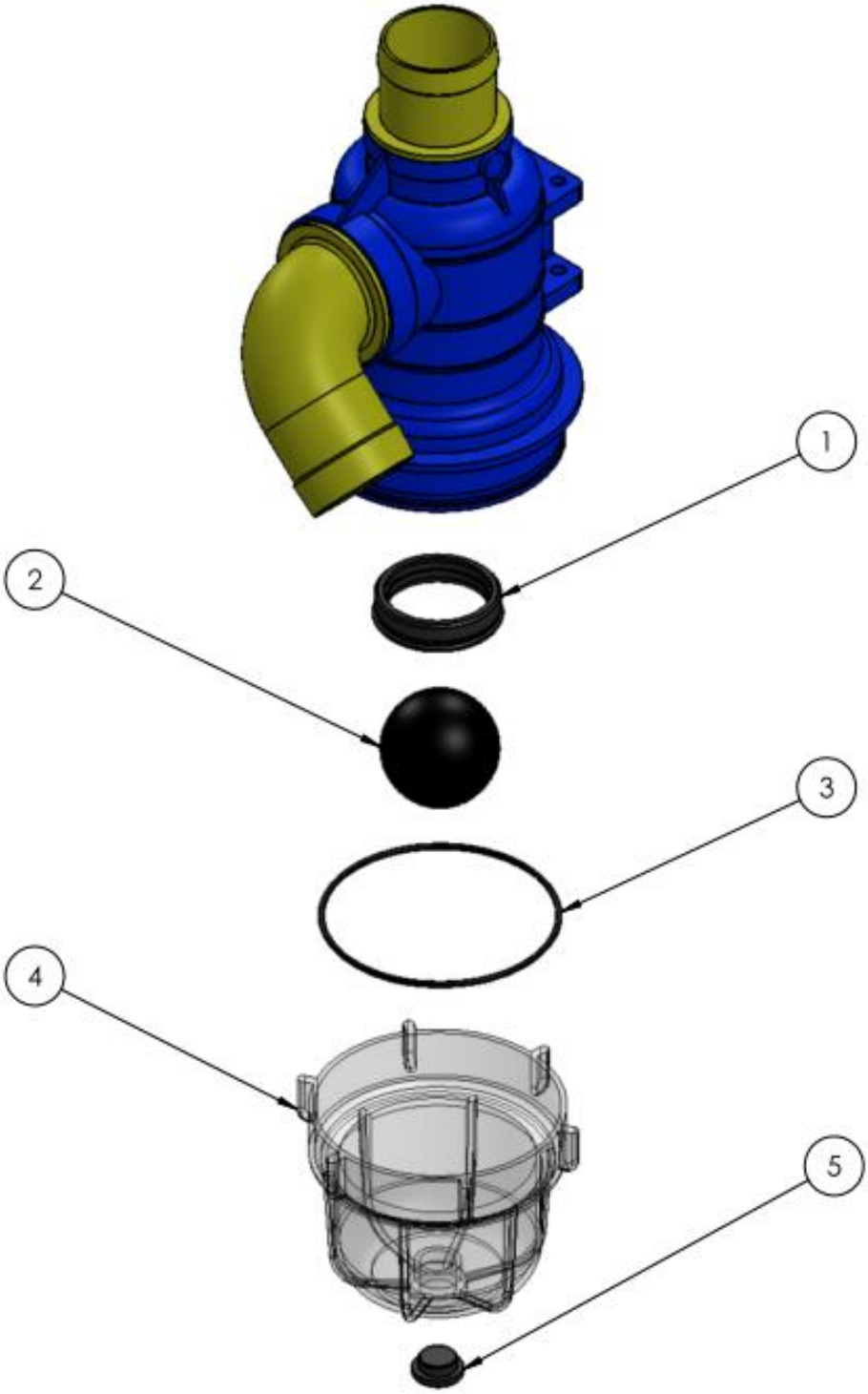

SEE TABLE NO: 024

TABLE NO: 024 SECONDARY TRAP ASSEMBLY			
		ALL MODELS	
ITEM NO	DESCRIPTION	CODE	QTY
1	GASKET	ZTAN53	1
2	80mm RUBBER BALL	ZTAN26A	1
3	O-RING	VT-BS25990	1
4	GLASS BOWL	ZTAN42	1
5	BUNG	P001.620	1

6" GATE VALVE

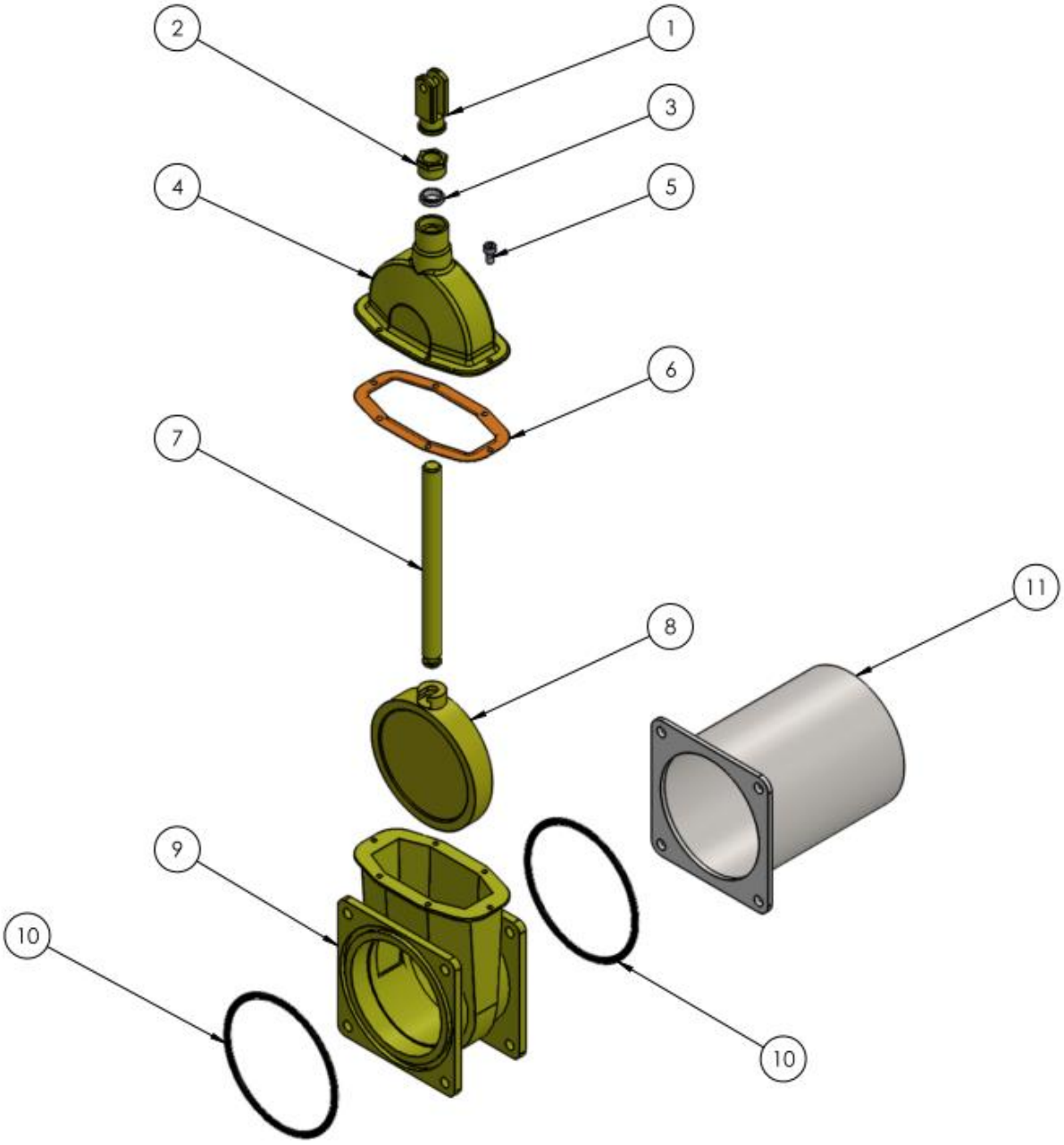

SEE TABLE NO: 025

TABLE NO: 025 6” GATE VALVE ASSEMBLY							
ITEM NO	DESCRIPTION	RIV		MZ STANDARD		MZ HEAVY DUTY	
		CODE	QTY	CODE	QTY	CODE	QTY
1	‘U’ CONNECTION	N/A		VT-6030500	1	VT-6030500	1
2	NUT	VT-6045700	1	VT-6040500	1	VT-6040500	1
3	GRAPHITE RING	VT-6060500	2	VT-6060500	2	VT-6060500	2
4	TOP HOUSING	VT-RIV9822	1	VT-6090572	1	VT-6090562	1
5	BOLT	ZFAS166	6	ZFAS166	6	ZFAS166	6
6	GASKET	VT-RIV9834	1	VT-6070500	1	VT-6020562	1
7	SPINDLE	N/A		VT-6010500	1	VT-6010500	1
8	PLATE	VT-6025716	1	VT-6020572	1	VT-6020000	1
9	BOTTOM HOUSING	N/A		VT-6050572	1	VT-6050562	1
10	O-RING	VT-6080500	2	VT-6080500	2	VT-6080500	2
11	6” FLANGE ASSEMBLY (weld on)	P001.627	1	P001.627	1	P001.627	1

REAR DISCHARGE 6" MZ GATE VALVE

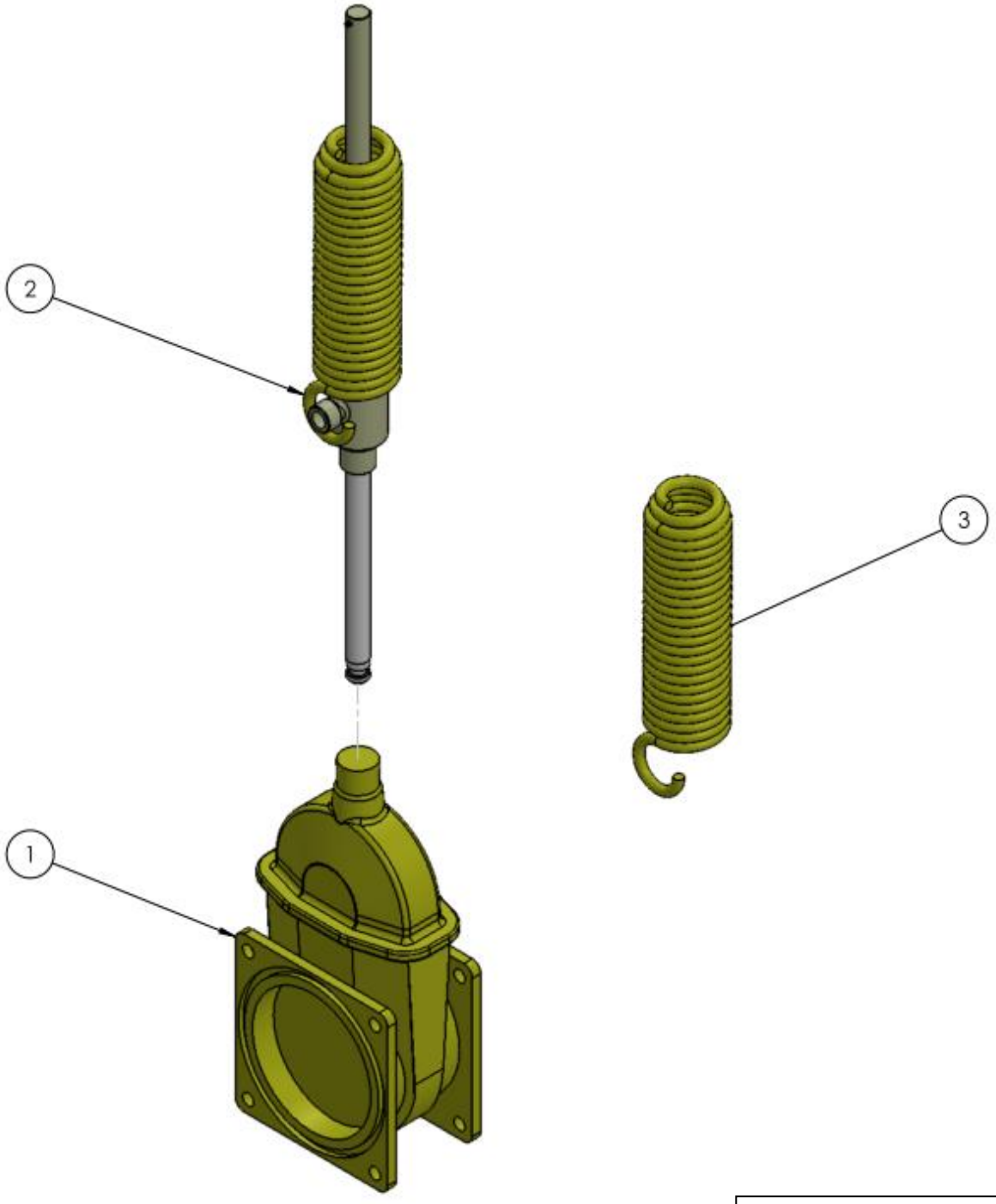

SEE TABLE NO: 026

TABLE NO: 026 REAR DISCHARGE 6” MZ GATE VALVE ASSEMBLY			
		ALL MODELS	
ITEM NO	DESCRIPTION	CODE	QTY
1	6” HEAVY DUTY MZ GATE VALVE	ZTAN15B	1
2	RAM / SPRING ASSEMBLY	ZTAN17	1
3	REPLACMENT SPRING	P001.621	1

QUICK ATTACH ASSEMBLY

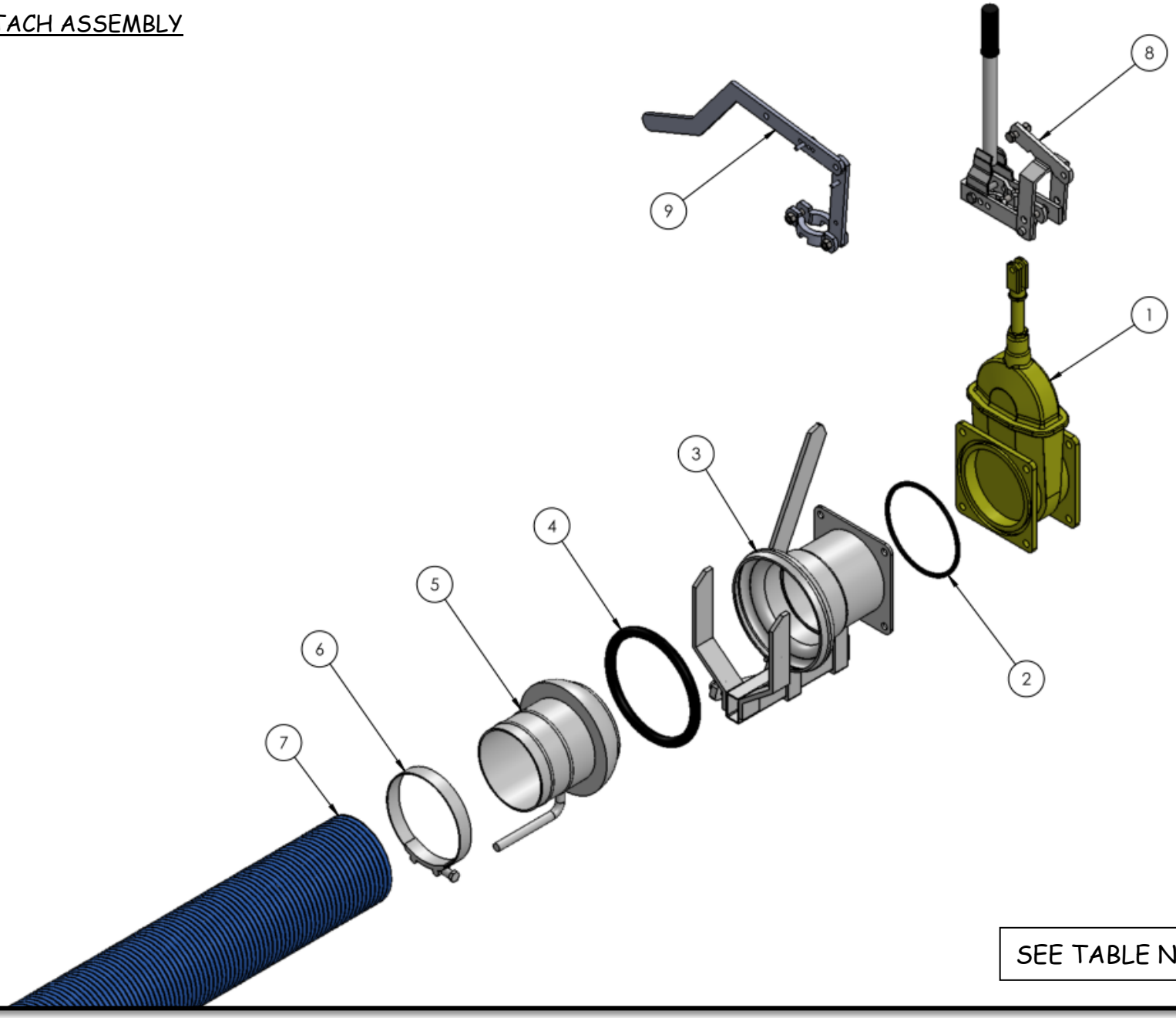

SEE TABLE NO: 027

TABLE NO: 027 QUICK ATTACH ASSEMBLY			
		ALL MODELS	
ITEM NO	DESCRIPTION	CODE	QTY
1	6” MEDIUM DUTY MZ GATE VALVE	ZTAN15	1
2	O-RING	VT-6080500	2
3	QUICK ATTACH COUPLER	ZTAN11	1
4	O-RING	P001.609	1
5	QUICK ATTACH MALE END	ZTAN13	1
6	6” CLAMP	ZTAN31	1
7	15’ SUPERFLEX HOSE	ZTAN19	1
7	20’ SUPERFLEX HOSE	ZTAN20	1
8	GATE VALVE HANDLE	ZTAN16A	1
9	GATE VALVE HANDLE	ZTAN16	1
	15’ HOSE c/w MALE END & CLAMP	ZTAN19A	1
	20’ HOSE c/w MALE END & CLAMP	ZTAN20A	1

ZTAN14 DISCHARGE KIT

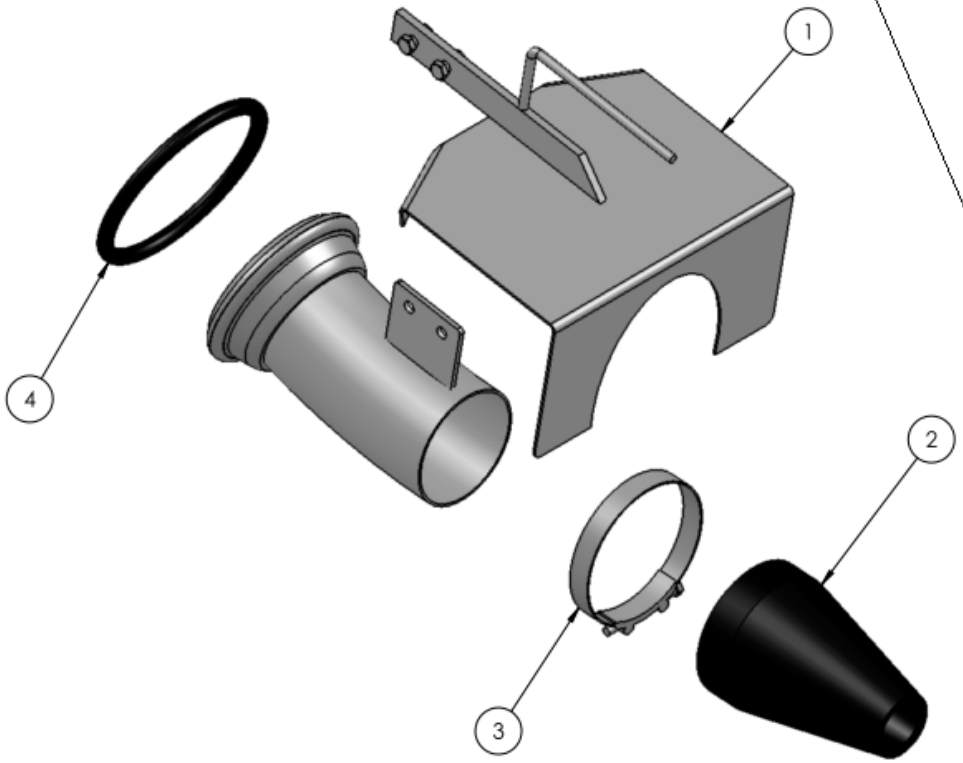

SEE TABLE NO: 028

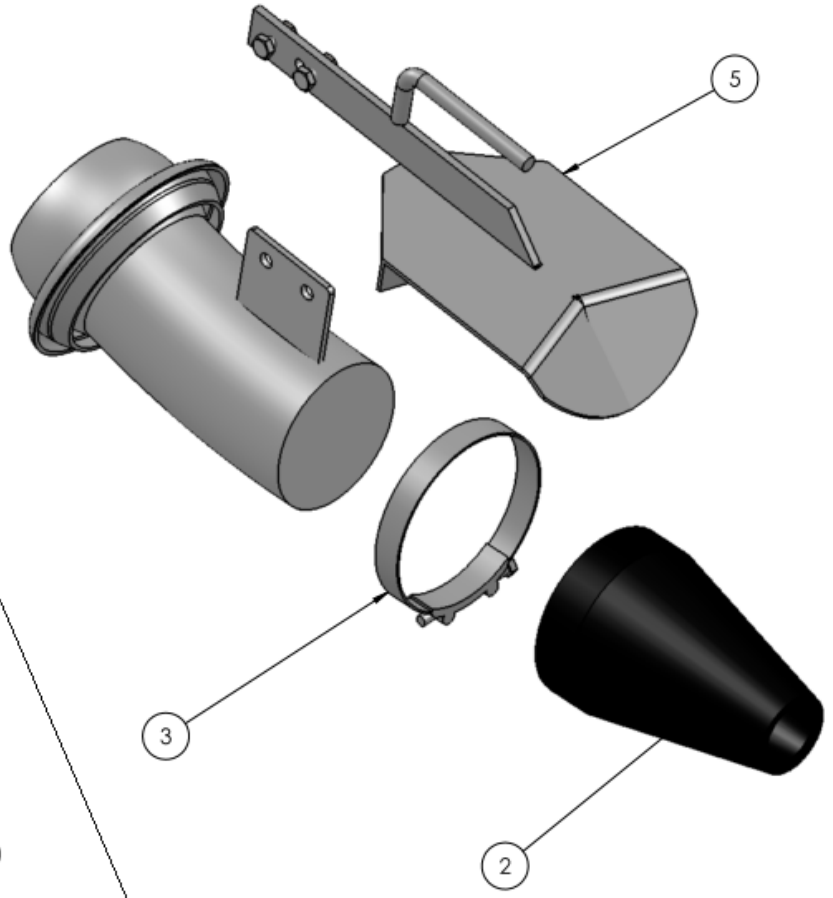

ZTAN14A DISCHARGE KIT

TABLE NO: 028 REAR DISCHARGE KITS ZTAN14 & ZTAN14A			
		ALL MODELS	
ITEM NO	DESCRIPTION	CODE	QTY
1	SPREAD PLATE	VT-OM211	1
2	RUBBER SPRINKER CONE	VT-6680000	1
3	CLAMP	VT-175187	1
4	O-RING	P001.609	1
5	SPREAD PLATE	VT-6720500	1

VACUUM TANKER PTO SHAFT PART No. ZGPP114

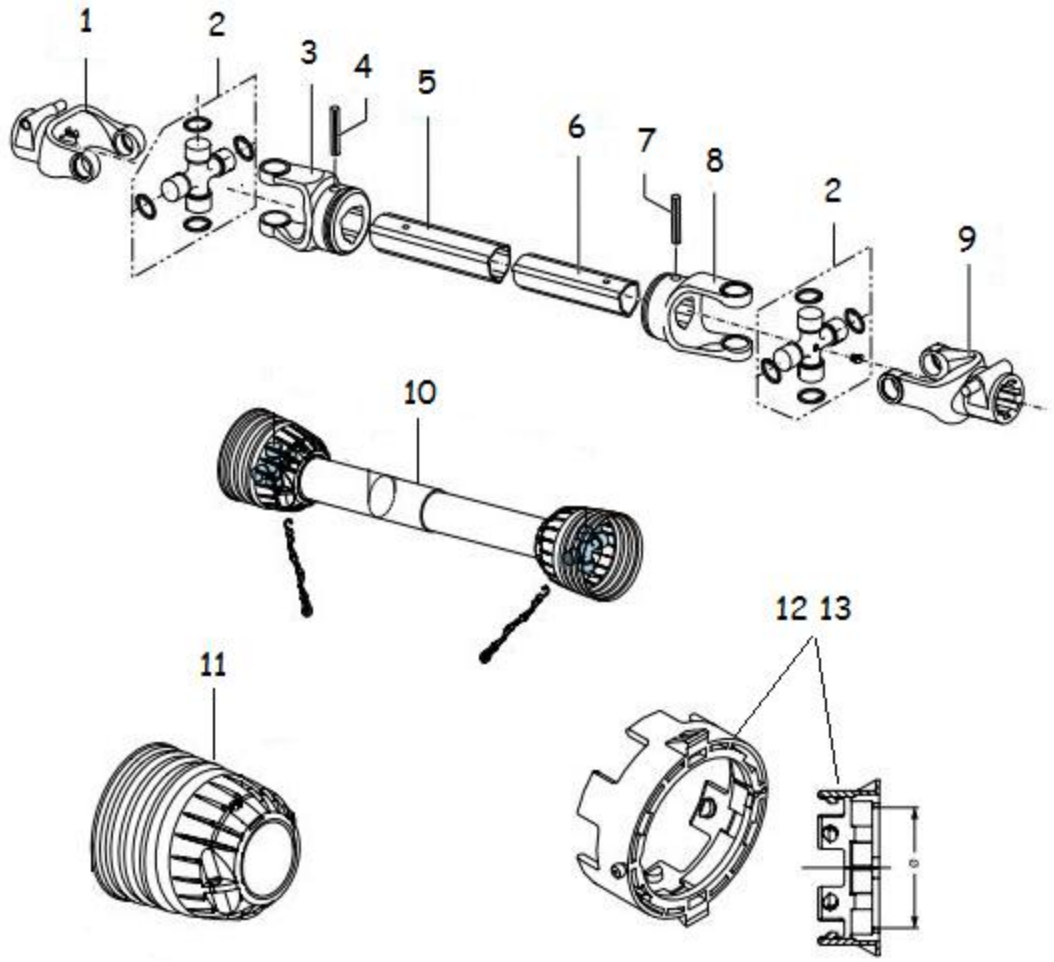

SEE TABLE NO: 029

TABLE NO: 029TANKER SHEARBOLT PTO SHAFT			
ZGPP114			
POS.	**PART NO.**	**PCS.**	**DESCRIPTION:**
1	P8C-141-025-363	2	1 3/8” x 6 SPLINED YOKE
2	P8S-200-6580	2	CROSS & BEARING KIT
3	P8C-151-015-011	1	OUTER PROFILE YOKE
4	P8C-190-000-016	1	M10 x 70mm ROLL PIN
5	P9T-610-4504-000	1	INNER PROFILE TUBE 3m
6	P8S-610-5203-000	1	OUTER PROFILE TUBE 3m
7	P8C-190-000-394	1	M10 x 65mm ROLL PIN
8	P8C-151-015-012	1	INNER PROFILE YOKE
9	P8C-143-250-001	1	SHEARBOLT YOKE
10	P8C-142-350-015-9550	1	SAFETY COVER
11	P8C-180-036-633	1	SAFETY COVER CONE
12	P8C-180-015-391	1	(a=62.5mm) COVER BEARING
13	P8C-180-015-390	1	(a=54.5mm) COVER BEARING

Battioni®
Pagani
Pompe

MEC 5000-6500-8000 / M

Rel. 0 dated 01/03/2012

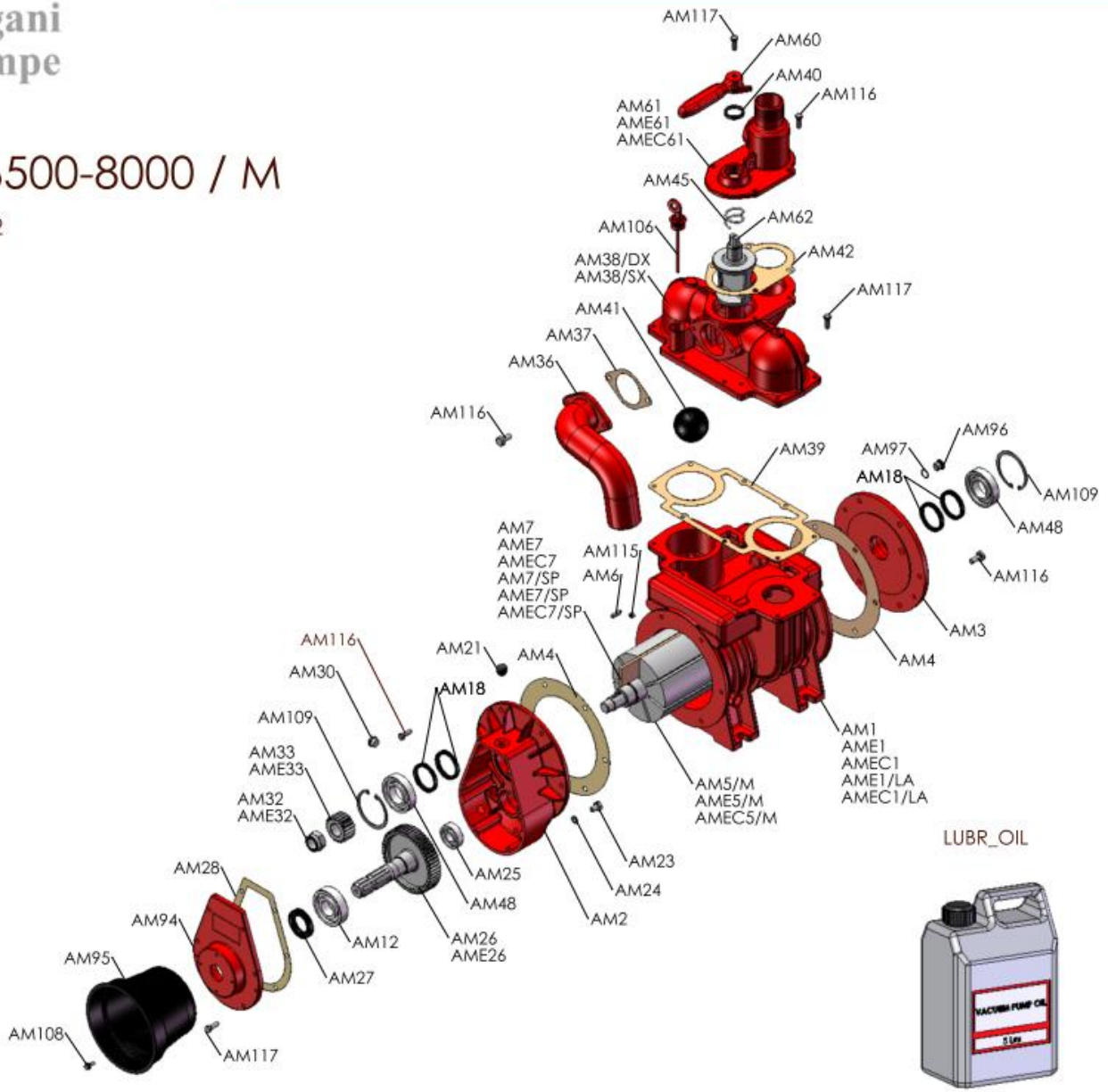

LUBR_OIL

REBUILD KIT

AM123
AME123
AMEC123
AM123/SP
AME123/SP
AMEC123/SP

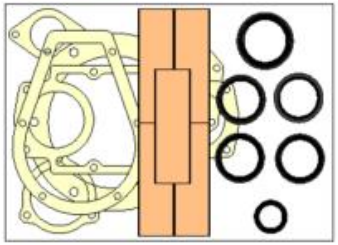

Battioni®
Pagani
Pompe

MEC 5000-6500-8000 / H

Rel. 0 dated 01/03/2012

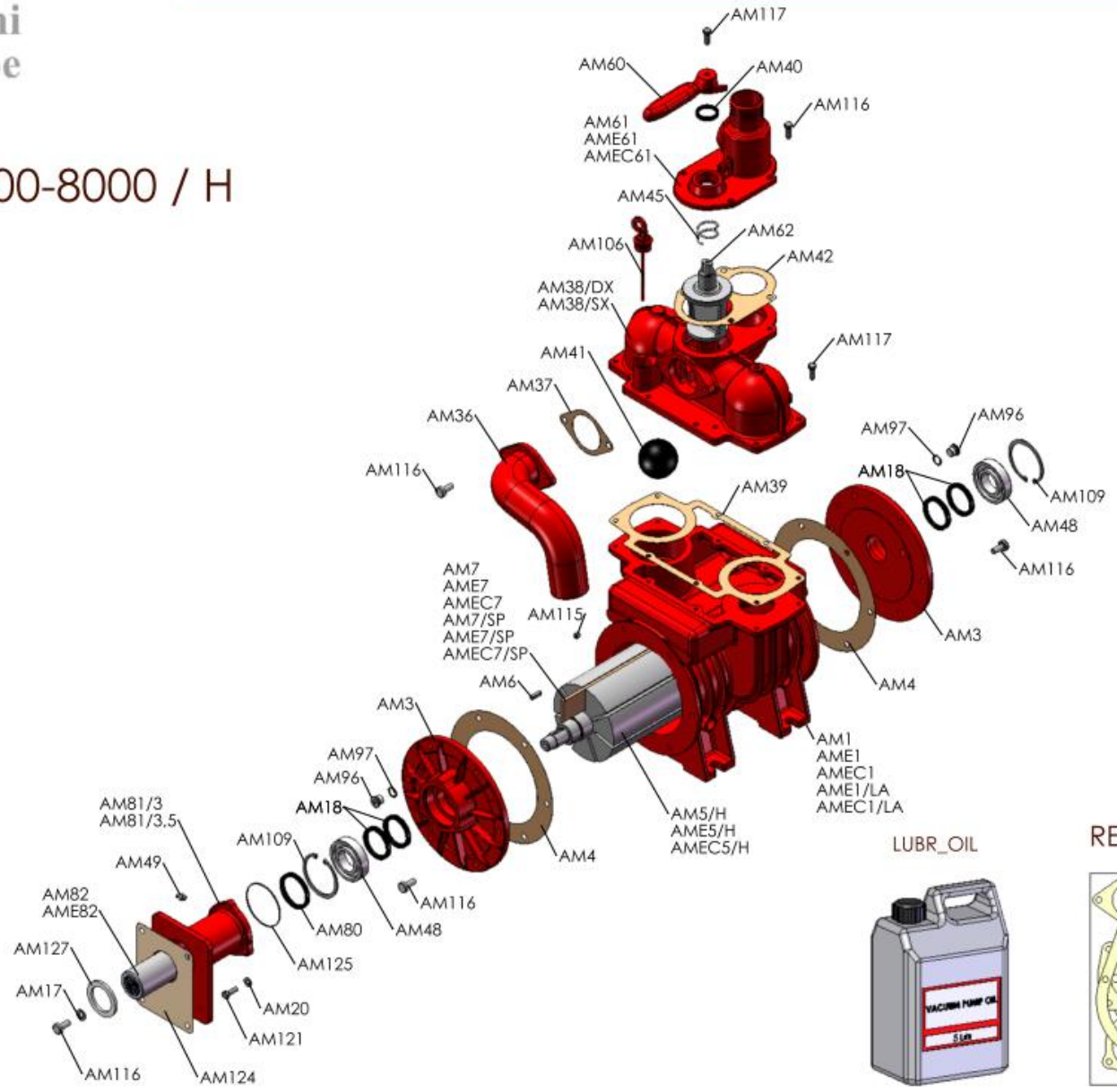

LUBR_OIL

REBUILD KIT

AM123
AME123
AMEC123
AM123/SP
AME123/SP
AMEC123/SP

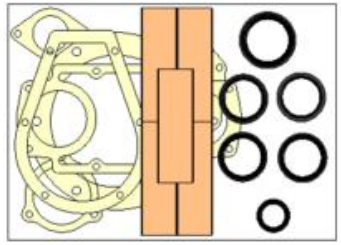

Ref.	*Code*	*Descrizione*	*Description*	*Qty*
AM1	4010101006	CORPO POMPA MEC 5000	HOUSING - MEC 5000	*1*
AMEC1	4010101007	CORPO POMPA MEC 6500 LF	HOUSING - MEC 6500 LF	*1*
AMEC1/LA	4010101097	CORPO POMPA MEC 6500 LA	HOUSING - MEC 6500 LA	*1*
AMEC1/SC	4010101098	CORPO POMPA MEC 6500 SC LF	HOUSING - MEC 6500 SC LF	*1*
AME1	4010101008	CORPO POMPA MEC 8000 LF	HOUSING - MEC 8000 LF	*1*
AME1/LA	4010101099	CORPO POMPA MEC 8000 LA	HOUSING - MEC 8000 LA	*1*
AME1/SC	4010101098	CORPO POMPA MEC 6500 SC LF	HOUSING - MEC 6500 SC LF	*1*
AM1/BAL	4010101083	CORPO POMPA MEC 5000 BALLAST	HOUSING - MEC 5000 BALLAST	*1*
AMEC1/BAL	4010101084	CORPO POMPA MEC 6500 BALLAST LF	HOUSING - MEC 6500 BALLAST LF	*1*
AMEC1/BAL-LA	4010101111	CORPO POMPA MEC 6500 BALLAST LA	HOUSING - MEC 6500 BALLAST LA	*1*
AME1/BAL	4010101082	CORPO POMPA MEC 8000 BALLAST LF	HOUSING - MEC 8000 BALLAST LF	*1*
AME1/BAL-LA	4010101112	CORPO POMPA MEC 8000 BALLAST LA	HOUSING - MEC 8000 BALLAST LA	*1*
AM2	4010301003	SCATOLA MOLT. MEC 5-6,5-8000/M	GEARBOX - MEC 5-6,5-8000/M	*1*
AM3	4010401003	FLANGIA ANT. POST. MEC 5000-6500-8000	FRONT AND BACK FLANGE - MEC 5000-6500-80	*1*
AM4	4030108007	GUARN. FLANGIA MEC 5-8000	FLANGE GASKET - MEC 5-8000	*2*
AM5/M	4010220014	ROTORE MEC 5000/M	ROTOR - MEC 5000/M	*1*
AMEC5/M	4010220015	ROTORE MEC 6500/M	ROTOR - MEC 6500/M	*1*
AME5/M	4010220016	ROTORE MEC 8000/M	ROTOR - MEC 8000/M	*1*
AM5/P	4010220017	ROTORE MEC 5000/P	ROTOR - MEC 5000/P	*1*
AMEC5/P	4010220018	ROTORE MEC 6500/P	ROTOR - MEC 6500/P	*1*
AME5/P	4010220019	ROTORE MEC 8000/P	ROTOR - MEC 8000/P	*1*
AM5/D	4010220071	ROTORE MEC 5000/D	ROTOR - MEC 5000/D	*1*
AMEC5/D	4010220072	ROTORE MEC 6500/D	ROTOR - MEC 6500/D	*1*
AME5/D	4010220073	ROTORE MEC 8000/D	ROTOR - MEC 8000/D	*1*
AM5/H	4010220081	ROTORE MEC 5000/H	ROTOR - MEC 5000/H	*1*
AMEC5/H	4010220082	ROTORE MEC 6500/H	ROTOR - MEC 6500/H	*1*
AME5/H	4010220083	ROTORE MEC 8000/H	ROTOR - MEC 8000/H	*1*
AMEC5/SC	4010220142	ROTORE MEC 6500/M SENZA COLLETTORE	ROTOR - MEC 6500/M SC	*1*
AME5/SC	4010220143	ROTORE MEC 8000/M SENZA COLLETTORE	ROTOR - MEC 8000/M SC	*1*
AM6	5050707002	CHIAVETTA 6X6X25	KEY - 6X6X25	*1*
AM7	4070113006	PALETTA STANDARD - MEC 5000 300X46.5X6.5	STANDARD BLADE - MEC 5000 300X46.5X6.5	*7*
AMEC7	4070113007	PALETTA STANDARD - MEC 6500 370X46.5X6.5	STANDARD BLADE - MEC 6500 370X46.5X6.5	*7*
AME7	4070113008	PALETTA STANDARD - MEC 8000 450X46.5X6.5	STANDARD BLADE - MEC 8000 450X46.5X6.5	*7*
AM7/SP	4070113123	PALETTA LONG LIFE - MEC 5000 300X46.5X6.5	LONG LIFE BLADE - MEC 5000 300X46.5X6.5	*7*
AMEC7/SP	4070113124	PALETTA LONG LIFE - MEC 6500 370X46.5X6.5	LONG LIFE BLADE - MEC 6500 370X46.5X6.5	*7*
AME7/SP	4070113125	PALETTA LONG LIFE - MEC 8000 450X46.5X6.5	LONG LIFE BLADE - MEC 8000 450X46.5X6.5	*7*
AMEC7/SC	4070113180	PALETTA STANDARD - MEC 6500 369X46.5X9.7	STANDARD BLADE - MEC 6500 369X46.5X9.7	*5*
AME7/SC	4070113181	PALETTA STANDARD - MEC 8000 449X46.5X9.7	STANDARD BLADE - MEC 8000 449X46.5X9.7	*5*
AM10	5060100002	ASTA LIVELLO OLIO 18X79 MM	OIL LEVEL ROD - 18X79 MM	*1*
AM12	5012107010	CUSCINETTO A SFERE 6307	BALL BEARING - 6307	*1*
AM17	5050207004	RONDELLA D 10	SMOOTH WASHER - D 10	*1*
AM18	5030300006	PARAOLIO 48X62X8	OIL SEAL - 48X62X8	*4*
AM18/V	5030300040	PARAOLIO 48X62X8 FKM	OIL SEAL - 48X62X8 FKM	*4*
AM20	5050207002	RONDELLA D 6	SMOOTH WASHER - D 6	*3*
AM21	5060605001	TAPPO CARICO OLIO D 3/8" GAS	OIL PLUG - D 3/8" GAS	*1*
AM23	5050107018	VITE M 10X16 TE	SCREW - M 10X16 TE	*1*
AM24	5050202002	RONDELLA D 10X16X1,5 ALLUMINIO	ALUMINIUM WASHER - D 10X16X1,5	*1*
AM25	5012107006	CUSCINETTO A SFERE 6304	BALL BEARING - 6304	*1*
AM26	4020507002	INGR. CON ALBERO MEC 2-5000 Z55-M2,5	GEAR WITH SHAFT - Z55-M2,5 MEC 2-5000	*1*
AME26	4020507003	INGR. CON ALBERO MEC 6,5-8000 Z53-M2,5	GEAR WITH SHAFT - Z53-M2,5 MEC 6,5-8000	*1*
AM27	5030300005	PARAOLIO 35X62X10	OIL SEAL - 35X62X10	*1*
AM28	4030108006	GUARN. COPERCHIO SCAT. MOLT. MEC 2-8000	GEARBOX COVER GASKET - MEC 2-8000	*1*
AM30	5060105004	TAPPO LIVELLO OLIO D 3/8" GAS	OIL LEVEL PLUG - D 3/8" GAS	*1*
AM32	5050300001	DADO AUTOBLOCCANTE M 24X2X15	SELF-LOCKING NUT - M 24X2	*1*
AME32	5050300002	DADO AUTOBLOCCANTE M 27X2X16	SELF-LOCKING NUT - M 27X2X16	*1*
AM33	4020607002	PIGNONE MEC 2-5000 Z21-M2,5	PINION - Z21-M2,5 MEC 2-5000	*1*
AME33	4020607003	PIGNONE MEC 6,5-8000 Z23-M2,5	PINION - Z23-M2,5 MEC 6,5-8000	*1*

AM36	4010901003	CURVA DI SCARICO MEC 5-8000	EXHAUST ELBOW - MEC 5-8000	*1*
AM37	4030110003	GUARN. LATERALE COLL. MEC 5-8000	MANIFOLD SIDE GASKET - MEC 5-8000	*1*
AM38/DX	4010501004	COLLETTORE MEC 5-6,5-8000	MANIFOLD - MEC 5-8000	*1*
AM38/SX	4010501025	COLLETTORE MEC 5-6,5-8000 SINISTRO	MANIFOLD - MEC 1000-1600 CCW	*1*
AM39	4030109005	GUARN. COLLETTORE MEC 5-8000	MANIFOLD GASKET - MEC 5-8000	*1*
AM40	5030300007	PARAOLIO 30X40X7 TC	OIL SEAL - 30X40X7	*1*
AM41	5060410006	SFERA IN GOMMA PESANTE D 70	RUBBER BALL - D 70	*1*
AM42	4030109006	GUARN. COPERCHIO COLL. MEC 5-8000	MANIFOLD COVER GASKET - MEC 5-8000	*1*
AM45	4012007002	MOLLA MEC 5-8000	SPRING - MEC 5-8000	*1*
AM48	5012107004	CUSCINETTO A SFERE 6208	BALL BEARING - 6208	*2*
AM49	5050812001	INGRASSATORE M 10X1	LUBRICATOR - M 10X1	*1*
AM50	5050207008	RONDELLA TRANCIATA D 10X40	BLANK WASHER - D 10X40	*1*
AM51	5050107021	VITE M 10X30 TE	SCREW M 10X30 TE	*1*
AM52	5050707007	CHIAVETTA 8X7X50	KEY - 8X7X50	*1*
AM53	5030300002	PARAOLIO 35X52X10	OIL SEAL - 35X52X10	*1*
AM56	5050107014	VITE M 8X50 TE	SCREW - M 8X50 TE	*3*
AM60	4010801007	MANIGLIA MEC 2-8000	HANDLE - MEC 2-8000	*1*
AM61	4010601075	COPERCHIO COLLETTORE D 60 MEC 5-6500	MANIFOLD COVER - D 60 MEC 5-6500	*1*
AME61	4010601076	COPERCHIO COLLETTORE D 80 MEC 8000	MANIFOLD COVER - D 80 MEC 8000	*1*
AMEC61	4010601016	COPERCHIO COLLETTORE D 76 MEC 5-6,5-8000	MANIFOLD COVER - MEC 5-6,5-8000 D76	*1*
AM62	4010701012	CONO INVERTITORE MEC 5-8000	REVERSING GEAR - MEC 5-8000	*1*
AM63	4010406004	FLANGIA PREMICURVA - MEC 5/6,5/8000	SUPPORT FLANGE - D 76 - MEC 5/6,5/8000	*2*
AM64	5030210019	ANELLO TENUTA OR 179 MEC 5000 UL	SEAL RING - OR 179	*2*
AM65	4010601078	COPERCHIO COLLETTORE MEC 5-6,5-8000 UL	MANIFOLD COVER - MEC 5-6,5-8000 UL	*1*
AM66	5050107022	VITE M 10X40 TE	SCREW - M 10X40 TE	*4*
AM67	4010501012	COLLETTORE MEC 5-6,5-8000 UL	MANIFOLD - MEC 5-8000 UL	*1*
AM68	4030109027	GUARN. COPERCHIO COLL. MEC 5-8000 UL	MANIFOLD COVER GASKET - MEC 5-8000 UL	*1*
AM69	4010501005	COLLETTORE MEC 5-6,5-8000 DU	MANIFOLD - MEC 5-8000 DU	*1*
AM72	4030109009	GUARN. COPERCHIO COLL. MEC 5-8000 DU	MANIFOLD COVER GASKET - MEC 5-8000 DU	*1*
AM73	4010606004	COPERCHIO SERBATOIO OLIO MEC 5-8000 SC	OIL TANK COVER - MEC 5-8000 SC	*1*
AM75	5050107125	VITE M 10X110 TCEI	SCREW - M 10X110 TCEI	*1*
AM76	5030300032	PARAOLIO 45X60X10	OIL SEAL - 45X60X10	*1*
AM80	5030300013	PARAOLIO 55X68X8	OIL SEAL - 55X68X8	*1*
AM81/3	4011001045	SUPPORTO MOTORE IDR. MEC 2-8000/H GR. 3	HYDR. MOT. SUPPORT - MEC 2-8000/H GR. 3	*1*
AM81/3,5	4011001016	SUPPORTO MOTORE IDR.MEC 2-11000/H GR.3,5	HYDR. MOT. SUPPORT - MEC 2-8000/H GR.3,5	*1*
AM82	4020107006	MANICOTTO TRASM. MOT. IDR. MEC 2-5000	HYDR. MOTOR TRANSM. COUPLING MEC 2-5000	*1*
AME82	4020107007	MANICOTTO TRASM. MOT. IDR. MEC 6,5-8000	HYDR. MOTOR TRANSM.COUPLING MEC6,5-8000	*1*
AM83	4010901013	CURVA DI SCARICO ORIENT. MEC 5-8000 D 76	REVOLVING ELBOW - MEC 5-8000 D 76	*2*
AME83	4010906004	CURVA DI SCARICO ORIENT. MEC 5-8000 D 80	REVOLVING ELBOW - MEC 5-8000 D 80	*2*
AM84	4010601090	COPERCHIO COLLETTORE MEC 5-6,5-8000 DU	MANIFOLD COVER - MEC 5-6,5-8000 DU	*1*
AM85	4010701013	CONO INVERTITORE MEC 5-8000 DU	REVERSING GEAR - MEC 5-8000 DU	*1*
AM86	5050707015	CHIAVETTA 8X7X40	KEY - 8X7X40	*1*
AME87	5020107002	PRESA CALETTATA FORO D 32 -Ø 1"3/8	SPLINED HUB HOLE D 32 - MEC 6500/8000	*1*
AM94	4010601115	COPERCHIO SCATOLA MOLT. MEC 2-8000 CE	GEARBOX COVER - MEC 2-8000 CE	*1*
AM95	4060505000	PROTEZIONE ALBERO CE	SHAFT GUARD - CE	*1*
AM96	5050906006	TAPPO D 16x1.5 - DIN 908 -	PLUG - D 16X1	*2*
AM97	5050202007	RONDELLA D 16X20X1,5 ALLUMINIO	ALUMINIUM WASHER - D 16X20X1,5	*2*
AM98	5050107028	VITE M 12X35 TE	SCREW - M 12X35 TE	*4*
AM99	5050207005	RONDELLA D 12	SMOOTH WASHER - D 12	*4*
AM100	4010401007	FLANGIA DI SUPP. DECOM. GARDA/5-6.5-8000	PUMP SUPPORT FLANGE - MEC/G 5000	*1*
AM101	4030108029	GUARN. FLANGIA SUPP. DECOMPR. MEC /G	PUMP SUPPORT GASKET - MEC/G	*1*
AM102	4020607004	PIGNONE DEC. GARDA MEC 2-5000 Z39-M3	GARDA PINION - Z39-M3 MEC 2-5000	*1*
AME102	4020607005	PIGNONE DEC. GARDA MEC 6,5-8000 Z39-M3	GARDA PINION - Z39-M3 MEC 6,5-8000	*1*
AM103	5050107026	VITE M 10X25 TCEI	SCREW - M 10X25 TCEI	*6*
AM105	4020607016	PIGNONE DEC. GARDA MEC 2-5000 GA Z50-M3	GARDA PINION - Z50-M3 MEC 2-5000 GA	*1*
AME105	4020607017	PIGNONE DEC. GARDA MEC 8000 GA Z50-M3	GARDA PINION - Z50-M3 MEC 6,5-8000 GA	*1*
AM106	5060605009	ASTA LIVELLO OLIO 30X130 MM	OIL LEVEL ROD - 30X130 MM	*1*
AM107	5030210060	ANELLO DI TEN. SUPP. DEC. OR171.12x2.62	SEAL RING - OR171.12x2.62 .../G	*1*

AM108	5050107084	VITE M 6x16 TEF - FL/ZIGR 8.8 -	SCREW - M 6X16 TEF	*4*
AM109	5050507011	ANELLO SEEGER D 80 I	CIRCLIP - D 80 I	*2*
AM110	4010007022	TUBO COLLEGAMENTO BALLAST SYSTEM	HOSE - BALLAST SYSTEM	*2*
AM111	5040407005	RACCORDO CURVO M/M 1/2" GAS	CURVED CONNECTOR - M/M 1/2" GAS	*2*
AM112	4010007021	TUBO PER FILTRI BALLAST SYSTEM	HOSE FOR FILTER - BALLAST SYSTEM	*2*
AM113	6100200029	VALVOLA UNIDIREZIONALE D 1/2" BALLAST	UNIDIRECTIONAL VALVE - BALLAST D 1/2"	*2*
AM114	4010007023	SOSTEGNO TUBI BALLAST MEC 6500/8000	HOSES SUPPORT - MEC 6500/8000 BALLAST	*1*
AM114-5	4010007024	SOSTEGNO TUBI BALLAST MEC 5000	HOSES SUPPORT - MEC 5000 BALLAST	*1*
AM115	5050903001	TAPPO M 10x1 - DIN 906	PLUG - M 10X 1	*2*
AM116	5050107109	VITE M 10X25 TEF - FL/ZIGR 8.8 -	SCREW - M 10X25 TEF - FL/ZIGR 8.8	*20*
AM117	5050107108	VITE M 8X25 TEF - FL/ZIGR 8.8 -	SCREW - M 8X25 TEF - FL/ZIGR 8.8	*20*
AM119	4010601153	COPERCHIO ANTERIORE MEC 5-13500 /P-AL	FRONT COVER - MEC 5-13500/P AL	*1*
AM120	4010601101	COPERCHIO ANTERIORE CE MEC 2-13500/D	FRONT COVER - CE MEC 2-4000/D	*1*
AM121	5050107122	VITE M 6X25 TE -10.9 -	SCREW - M 6X25 TE -10.9 -	*3*
AM122	4020507013	INGR. CON ALBERO MEC6,5-8000/HM Z53-M2,5	GEAR WITH SHAFT MEC6,5-8000/HM Z53-M2,5	*1*
AM124	4030108046	GUARN. SUPP. MOTORE IDR. GRUPPO 3.5 -MEC	HYDR. MOT. SUPP. GASKET - GR. 3.5 - MEC	*1*
AM125	5030210028	ANELLO TENUTA OR 2337 POMPA LF	SEAL RING - OR 86824 LF PUMP	*1*
AM126	4010601160	COPERCHIO SCATOLA MOLT. HM MEC 2-8000	GEARBOX COVER - MEC 2-8000 HM	*1*
AM127	4011707041	ANELLO DI RIDUZ. PER MOT. IDR. G.3 MEC	CETERING RING FOR HYDR. MOTOR - MEC GR3	*1*
AM128	5060010020	POMOLO LEVA SPECIALE UNI 707 M14X25	HANDLE KNOB - D 14X25 EN 707	*2*
AM129	4011912012	PERNO MANIGLIA UNI 707 MEC 2/8000-STAR	HANDLE PIN - MEC 2-8000 STAR - EN 707	*1*
AM130	4010007034	SOSTEGNO MANIGLIA UNI 707 MEC 5-6,5-8000	SUPPORT FOR HANDLE UNI 707 MEC 5-8000	*1*
AM131	4010801025	MANIGLIA UNI 707 MEC 2000-8000	HANDLE - MEC 2-8000 EN707	*1*
AM132	5050107022	VITE M 10X40 TE	SCREW M 10X40 TE	*1*
AM133	5050207004	RONDELLA D 10	WASHER D 10	*2*
AM134	5050300009	DADO AUTOBLOCCANTE M 10	SELF-LOCKING NUT - M 10	*1*
AM135	5060010001	POMOLO MANIGLIA WPT-SE-STAR	HANDLE KNOB - D 3/8" GAS	*1*
AM136	4011912001	PERNO MANIGLIA STAR-WPT	HANDLE PIN - STAR-WPT	*1*
AM137	4011907050	PERNO COLL. ATT. MEC5-8000(SE 6500-8000)	CONNECTION PIN - SE 6500-8000	*1*
AM138	5050307004	DADO M 12	NUT - M 12	*1*
AM139	5090000050	CILINDRO ROTATIVO PNEUMATICO DA 60 PLUS	PNEUM. REV. CYLINDER - DA 60- PUMPS - P	*1*
AM140	4011001047	SUPPORTO ATTUATORE PNEUM. MEC 5000 PLUS	PNEUM. REV. CYLINDER SUPP. (PLUS) - MEC5	*1*
AM141	4010701004	CONO INVERTITORE MEC 5-8000 -SE 6,5-8000	REVERSING GEAR - MEC 5-8000 - SE 8000	*1*
AM142	5050107006	VITE M 6X20 TE	SCREW M 6X20 TE	*4*
AM143	5050207002	RONDELLA D 6	WASHER D 6	*4*
AM144	4010801031	MANIGLIA IDRAULICA MEC 2000-8000	HANDLE - MEC 2000-8000 HYDRAULIC	*1*
AM145	5090000005	PISTONE PER MANIGLIA IDR. - MEC 5-8000	PISTON - HYDR. HANDLE - MEC 5-8000	*1*
AM146	4011907087	SPINOTTO LATERALE MEC 5-8000 CIL.IDRAUL.	SIDE PIN FOR HYDR.HANDLE MEC 5-8000	*1*
AM147	4011001069	SUPPORTO CILINDRO IDR.(PISTONE)MEC5-8000	HYDR. HANDLE SUPPORT MEC 5-8000	*1*
AM148	5050507021	COPPIGLIA A MOLLA 2.5X58	COTTER PIN 2.5X58	*1*
AM149	5050300013	DADO AUTOBLOCCANTE M 12 BASSO - DIN 985	SELF-LOCKING NUT M 12	*1*
AM123	6010201006	KIT REVISIONE POMPA MEC 5000 STANDARD	REBUILD KIT - MEC 5000 STANDARD	*1*
AME123	6010201007	KIT REVISIONE POMPA MEC 6500 STANDARD	REBUILD KIT - MEC 6500 STANDARD	*1*
AMEC123	6010201008	KIT REVISIONE POMPA MEC 8000 STANDARD	REBUILD KIT - MEC 8000 STANDARD	*1*
AM123/SP	6010201019	KIT REVISIONE POMPA MEC 5000 LONG LIFE	REBUILD KIT - MEC 5000 LONG LIFE	*1*
AME123/SP	6010201020	KIT REVISIONE POMPA MEC 6500 LONG LIFE	REBUILD KIT - MEC 6500 LONG LIFE	*1*
AMEC123/SP	6010201021	KIT REVISIONE POMPA MEC 8000 LONG LIFE	REBUILD KIT - MEC 8000 LONG LIFE	*1*
AME123/SC	6010201067	KIT REVISIONE POMPA MEC 6500 M S.C.	REBUILD KIT - MEC 6500 M SC	*1*
AMEC123/SC	6010201068	KIT REVISIONE POMPA MEC 8000 M S.C.	REBUILD KIT - MEC 8000 M SC	*1*
AM123/BAL	6010201072	KIT REVISIONE POMPA MEC 5000 BALLAST	REBUILD KIT - MEC 5000 BALLAST	*1*
AME123/BAL	6010201073	KIT REVISIONE POMPA MEC 6500 BALLAST	REBUILD KIT - MEC 6500 BALLAST	*1*
AMEC123/BAL	6010201057	KIT REVISIONE POMPA MEC 8000 BALLAST	REBUILD KIT - MEC 8000 BALLAST	*1*
LUBR_OIL	5070200100	OLIO BATTIONI PAGANI POMPE (5LT)	BATTIONI PAGANI VACUUM PUMP OIL (5LT)	*1*

Battioni®
Pagani
Pompe

MEC 9000-11000-13500 / M-MA

Rel. 0 dated 01/03/2012

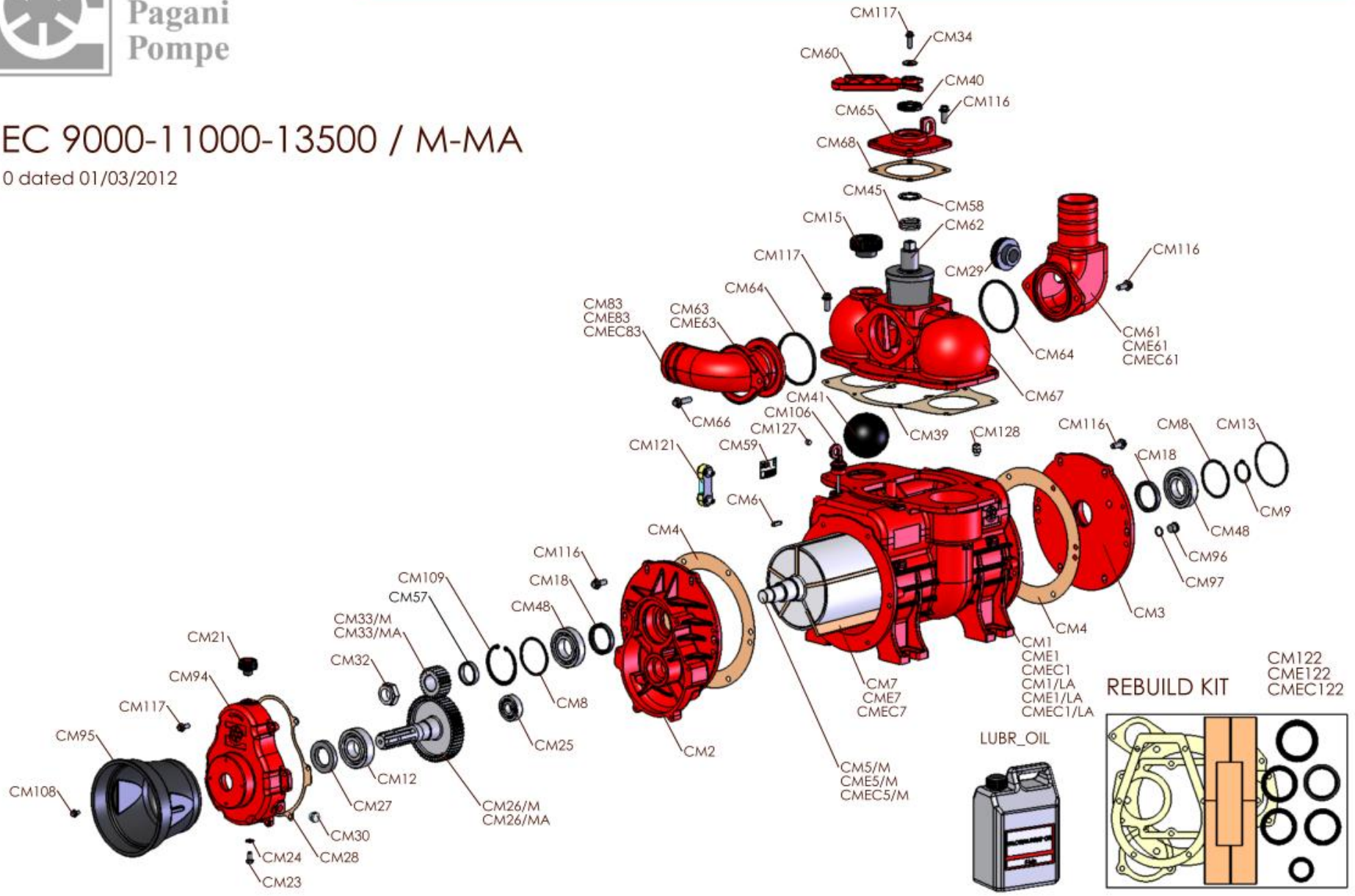

Battioni®
Pagani
Pompe

MEC 9000-11000-13500 / H

Rel. 0 dated 01/03/2012

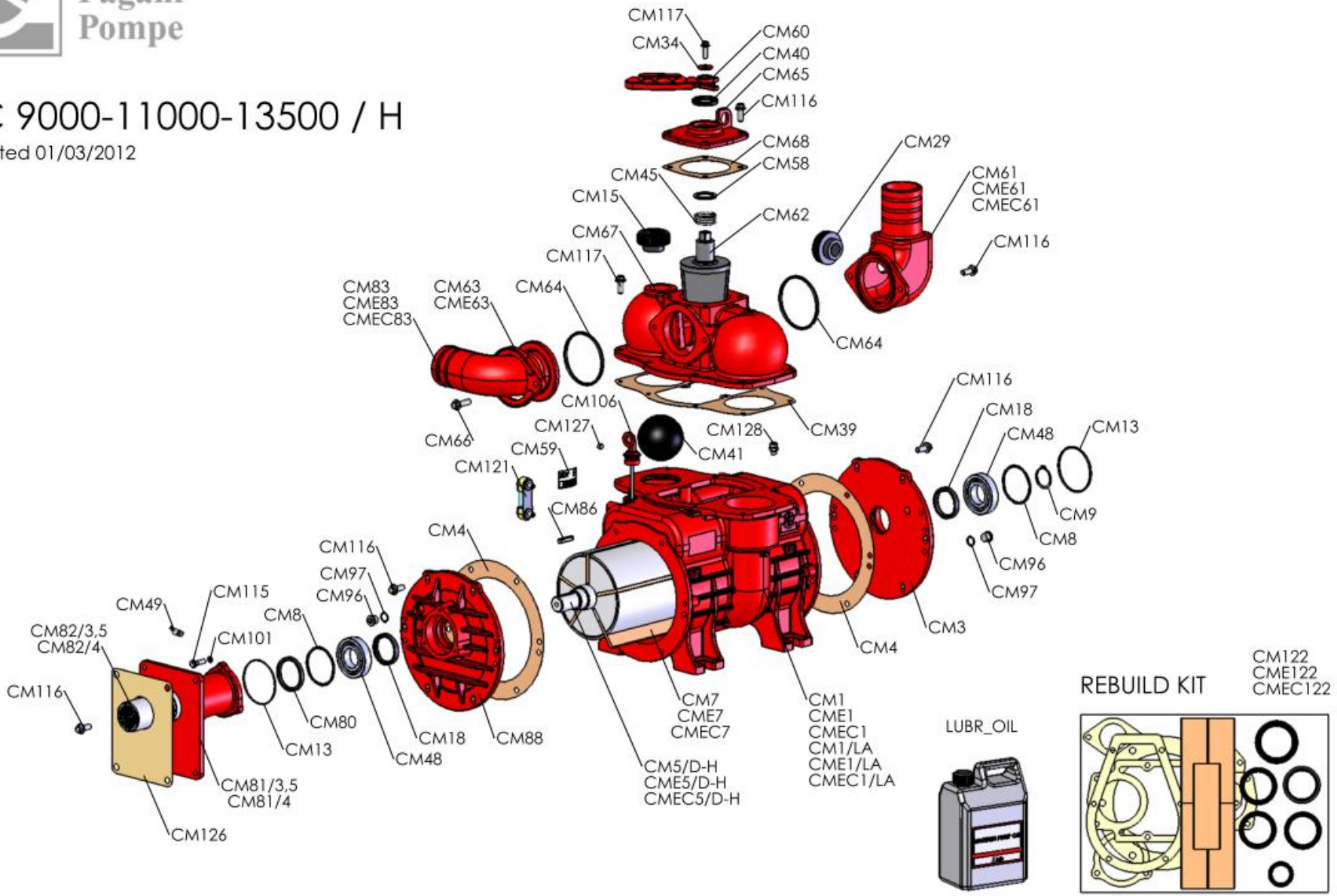

Ref.	*Code*	*Descrizione*	*Description*	*Qty*
CM1	4010101085	CORPO POMPA MEC 9000 LF	HOUSING - MEC 9000 LF	*1*
CM1/LA	4010101101	CORPO POMPA MEC 9000 LA	HOUSING - MEC 9000 LA	*1*
CM1/SC	4010101113	CORPO POMPA MEC 9000 SC LF	HOUSING - MEC 9000 SC LF	*1*
CM1/BAL	4010101102	CORPO POMPA MEC 9000 BALLAST LF	HOUSING - MEC 9000 BALLAST LF	*1*
CM1/BAL-LA	4010101103	CORPO POMPA MEC 9000 BALLAST LA	HOUSING - MEC 9000 BALLAST LA	*1*
CME1	4010101086	CORPO POMPA MEC 11000 LF	HOUSING - MEC 11000 LF	*1*
CME1/LA	4010101104	CORPO POMPA MEC 11000 LA	HOUSING - MEC 11000 LA	*1*
CME1/SC	4010101107	CORPO POMPA MEC 11000 SC LF	HOUSING - MEC 11000 SC LF	*1*
CME1/BAL	4010101105	CORPO POMPA MEC 11000 BALLAST LF	HOUSING - MEC 11000 BALLAST LF	*1*
CME1/BAL-LA	4010101106	CORPO POMPA MEC 11000 BALLAST LA	HOUSING - MEC 11000 BALLAST LA	*1*
CMEC1	4010101087	CORPO POMPA MEC 13500 LF	HOUSING - MEC 13500 LF	*1*
CMEC1/LA	4010101108	CORPO POMPA MEC 13500 LA	HOUSING - MEC 13500 LA	*1*
CMEC1/SC	4010101114	CORPO POMPA MEC 13500 SC LF	HOUSING - MEC 13500 SC LF	*1*
CMEC1/BAL	4010101109	CORPO POMPA MEC 13500 BALLAST LF	HOUSING - MEC 13500 BALLAST LF	*1*
CMEC1/BAL-LA	4010101110	CORPO POMPA MEC 13500 BALLAST LA	HOUSING - MEC 13500 BALLAST LA	*1*
CM2	4010301028	SCATOLA MOLT. MEC 9000-11000-13500/M	GEARBOX - MEC 9000-11000-13500/M	*1*
CM3	4010401061	FLANGIA ANT. POST. MEC 9000-11000-13500	FRONT & BACK FLANGE MEC 9000-11000-13500	*2*
CM4	4030108048	GUARN. FLANGIA MEC 9-11-13500	BODY GASKET MEC 9-11-13500	*2*
CM5/M	4010220144	ROTORE MEC 9000/M	ROTOR - MEC 9000/M	*1*
CME5/M	4010220145	ROTORE MEC 11000/M	ROTOR - MEC 11000/M	*1*
CMEC5/M	4010220146	ROTORE MEC 13500/M	ROTOR - MEC 13500/M	*1*
CM5/MB	4010220159	ROTORE MEC 9000/M BALLAST	ROTOR - MEC 9000/M BALLAST	*1*
CME5/MB	4010220160	ROTORE MEC 11000/M BALLAST	ROTOR - MEC 11000/M BALLAST	*1*
CMEC5/MB	4010220161	ROTORE MEC 13500/M BALLAST	ROTOR - MEC 13500/M BALLAST	*1*
CM5/MSC	4010220153	ROTORE MEC 9000/M SENZA COLLETTORE	ROTOR - MEC 9000/M - COMPRESSOR	*1*
CME5/MSC	4010220154	ROTORE MEC 11000/M SENZA COLLETTORE	ROTOR - MEC 11000/M - COMPRESSOR	*1*
CMEC5/MSC	4010220155	ROTORE MEC 13500/M SENZA COLLETTORE	ROTOR - MEC 13500/M - COMPRESSOR	*1*
CM5/P	4010220147	ROTORE MEC 9000/P	ROTOR - MEC 9000/P	*1*
CME5/P	4010220148	ROTORE MEC 11000/P	ROTOR - MEC 11000/P	*1*
CMEC5/P	4010220149	ROTORE MEC 13500/P	ROTOR - MEC 13500/P	*1*
CM5/PB	4010220156	ROTORE MEC 9000/P BALLAST	ROTOR - MEC 9000/P BALLAST	*1*
CME5/PB	4010220157	ROTORE MEC 11000/P BALLAST	ROTOR - MEC 11000/P BALLAST	*1*
CMEC5/PB	4010220158	ROTORE MEC 13500/P BALLAST	ROTOR - MEC 13500/P BALLAST	*1*
CM5/D-H	4010220150	ROTORE MEC 9000/D-H	ROTOR - MEC 9000/D-H	*1*
CME5/D-H	4010220151	ROTORE MEC 11000/D-H	ROTOR - MEC 11000/D-H	*1*
CMEC5/D-H	4010220152	ROTORE MEC 13500/D-H	ROTOR - MEC 13500/D-H	*1*
CM5/DB-HB	4010220162	ROTORE MEC 9000/D-H BALLAST	ROTOR - MEC 9000/D-H BALLAST	*1*
CME5/DB-HB	4010220163	ROTORE MEC 11000/D-H BALLAST	ROTOR - MEC 11000/D-H BALLAST	*1*
CMEC5/DB-HB	4010220164	ROTORE MEC 13500/D-H BALLAST	ROTOR - MEC 13500/D-H BALLAST	*1*
CM6	5050707002	CHIAVETTA 6X6X25	KEY - 6X6X25	*1*
CM7	4070113192	PALETTA LONG LIFE - MEC 9000 300X60X6,5	LONG LIFE BLADE MEC 9000 300X60X6,5	*5*
CME7	4070113193	PALETTA LONG LIFE - MEC 11000 370X60X6,5	LONG LIFE BLADE MEC 11000 360X60X6,5	*5*
CMEC7	4070113194	PALETTA LONG LIFE - MEC 13500 460X60X6,5	LONG LIFE BLADE MEC 13500 460X60X6,5	*5*
CM7/B	4070113192	PALETTA LONG LIFE - MEC 9000 300X60X6,5	LONG LIFE BLADE MEC 9000 300X60X6,5	*8*
CME7/B	4070113193	PALETTA LONG LIFE - MEC 11000 370X60X6,5	LONG LIFE BLADE MEC 11000 360X60X6,5	*8*
CMEC7/B	4070113194	PALETTA LONG LIFE - MEC 13500 460X60X6,5	LONG LIFE BLADE MEC 13500 460X60X6,5	*8*
CM7/SC	4070113198	PALETTA STANDARD - MEC 9000 299X60X9,7	STANDARD BLADE - MEC 9000 299X60X9,7	*5*
CME7/SC	4070113199	PALETTA STANDARD - MEC 11000 369X60X9,7	STANDARD BLADE - MEC 11000 369X60X9,7	*5*
CMEC7/SC	4070113200	PALETTA STANDARD - MEC 13500 459X60X9,7	STANDARD BLADE - MEC 13500 459X60X9,7	*5*
CM8	5012207001	ANELLO DI COMPENSAZIONE Ø 80	COMPRESSION AND THRUST RING LMKAS 80 F	*2*
CM9	5050507017	ANELLO SEEGER D 40 E - DIN 471 -	CIRCLIP - D 40 E	*1*
CM12	5012107010	CUSCINETTO A SFERE 6307	BALL BEARING - 6307	*1*
CM13	5030210028	ANELLO TENUTA OR 2337 POMPA LF	SEAL RING - OR 86824 LF PUMP	*1*
CM14	5050107005	VITE M 6X16 TE	SCREW - M 6X16 TE	*3*
CM15	5060605006	TAPPO NERO D 2" GAS	BLACK PLUG - D 2" GAS	*1*
CM18	5030300041	PARAOLIO 48X62X10 DCV	OIL SEAL - 48X62X10 DCV	*2*
CME18	5030300042	PARAOLIO 48X62X10 DCV - FKM	OIL SEAL - 48X62X10 DCV - FKM	*2*
CM21	5060605001	TAPPO CARICO OLIO D 3/8" GAS	OIL PLUG - D 3/8" GAS	*1*

CM23	5050107018	VITE M 10X16 TE	SCREW - M 10X16 TE	*1*
CM24	5050202002	RONDELLA D 10X16X1,5 ALLUMINIO	ALUMINIUM WASHER - D 10X16X1,5	*1*
CM25	5012107006	CUSCINETTO A SFERE 6304	BALL BEARING - 6304	*1*
CM26/M	4020507003	INGR. CON ALBERO MEC 6,5-8000 Z53-M2,5	GEAR WITH SHAFT - Z53-M2,5 MEC 6,5-8000	*1*
CM26/MA	4020507012	INGR. CON ALBERO MEC9-13500/MA Z43-M2,5	GEAR WITH SHAFT MEC9-13500/MA Z43-M2,5	*1*
CM27	5030300005	PARAOLIO 35X62X10	OIL SEAL - 35X62X10	*1*
CM28	4030108049	GUARN. COPERCHIO MOLT. MEC 9-11-13500	GEARBOX COVER GASKET MEC 9-11-13500	*1*
CM29	5060605005	TAPPO NERO D 1"1/2	BLACK CAP - D 1"1/2	*1*
CM30	5060105004	TAPPO LIVELLO OLIO D 3/8" GAS	OIL LEVEL PLUG - D 3/8" GAS	*1*
CM32	5050300002	DADO AUTOBLOCCANTE M 27X2X16	SELF-LOCKING NUT - M 27X2X16	*1*
CM33/M	4020607003	PIGNONE MEC 6,5-8000 Z23-M2,5	PINION - Z23-M2,5 MEC 6,5-8000	*1*
CM33/MA	4020607057	PIGNONE MEC 9-11-13500/MA Z33-M2,5	PINION MEC 9-11-13500/MA Z33-M2,5	*1*
CM34	5050207022	RONDELLA 8X23X4 - DIN 6340	WASHER - 8X23X4 - DIN 6340	*1*
CM39	4030109035	GUARN. COLLETTORE MEC 9-11-13500	MANIFOLD GASKET MEC 9-11-13500	*1*
CM40	5030300015	PARAOLIO 35X50X7 TC	OIL SEAL - 35X50X7	*1*
CM41	5060410007	SFERA IN GOMMA PESANTE D 90	RUBBER BALL - D 90	*1*
CM45	4012007011	MOLLA MEC 9-11-13500	SPRING - MEC 9-11-13500	*1*
CM48	5012107004	CUSCINETTO A SFERE 6208	BALL BEARING - 6208	*2*
CM49	5050812001	INGRASSATORE M 10X1	LUBRICATOR - M 10X1	*1*
CM52	5050707007	CHIAVETTA 8X7X50	KEY - 8X7X50	*1*
CM53	5030300002	PARAOLIO 35X52X10	OIL SEAL - 35X52X10	*1*
CM57	4011707067	DISTANZIALE ROTORE MEC 9-11-13500 M-G	SPACER ROTOR M MEC 9000-11000-13500	*1*
CM58	5050207031	RONDELLA PER CONO INVERT. MEC 9-11-13500	TEFLON WASHER REV.GEAR MEC 9-11-13500	*1*
CM59	5101800000	THERMO LABEL	THERMO LABEL	*1*
CM60	4010801024	MANIGLIA MEC 9000-13500	HANDLE - MEC 9-13500	*1*
CM61	4011501030	CURVA ASPIRAZIONE D 76 MEC 9-11-13500	SUCTION ELBOW D 76 MEC 9-11-13500	*1*
CME61	4011501031	CURVA ASPIRAZIONE D 80 MEC 9-11-13500	SUCTION ELBOW D 80 MEC 9000-11000-13500	*1*
CMEC61	4011501032	CURVA ASPIRAZIONE D 100 MEC 9-11-13500	SUCTION ELBOW D 100 MEC 9000-11000-13500	*1*
CM62	4010701018	CONO INVERTITORE MEC 9000-11000-13500	REVERSING GEAR MEC 9-13500	*1*
CM63	4010406017	FLANGIA PREMICURVA D 80 - SE/STAR	FLANGE FOR ELBOW - STAR D80	*2*
CME63	4010406015	FLANGIA PREMICURVA D 100 - SE/STAR	FLANGE FOR ELBOW - STAR D100	*2*
CM64	5030210008	ANELLO TENUTA OR 189 STAR UL	SEAL RING - OR 189 STAR UL	*2*
CM65	4010601056	COPERCHIO COLLETTORE WPT/STAR UL	MANIFOLD COVER - WPT/STAR UL	*1*
CM66	5050107054	VITE M 10X35 TE	SCREW - M 10X35 TE	*4*
CM67	4010501026	COLLETTORE MEC 9000-11000-13500	MANIFOLD MEC 9000-11000-13500	*1*
CM68	4030109025	GUARN. COPERCHIO COLL. STAR-WPT UL	MANIFOLD COVER GASKET - STAR-WPT UL	*1*
CM73/2"	4010606020	COPERCHIO SERBATOIO 2" MEC 9-11-13500	OIL TANK COVER 2" MEC 9-11-13500	*1*
CM73/2"1/2	4010606021	COPERCHIO SERBATOIO 2"1/2 MEC 9-11-13500	OIL TANK COVER 2"1/2 MEC 9-11-13500	*1*
CM75	5050107050	VITE M 10X90 TCEI	SCREW M 10X90 TCEI	*1*
CM76	5030300032	PARAOLIO 45X60X10	OIL SEAL - 45X60X10	*1*
CM80	5030300013	PARAOLIO 55X68X8	OIL SEAL - 55X68X8	*1*
CM81/3,5	4011001016	SUPPORTO MOTORE IDR.MEC 2-11000/H GR.3,5	HYDR. MOT. SUPPORT - MEC 2-8000/H GR.3,5	*1*
CM81/4	4011001059	SUPPORTO MOTORE IDR. MEC9-11-13500/H GR4	HYDRAULIC MOTOR SUPP MEC9-11-13500/H GR4	*1*
CM82/3,5	4020107027	MANICOTTO TRASM. MOT. IDR.MEC 9000 GR3,5	HYDR.MOTOR TRANSM.COUPLING MEC9000 GR3	*1*
CM82/4	4020107024	MANICOTTO TRASM. MOT. IDR.MEC9-13500 GR4	HYDR.MOTOR TRANSM.COUPLING MEC9-11-13500	*1*
CM83	4010901018	CURVA DI SCARICO ORIENT. STAR D 76	REVOLVING ELBOW - STAR D 76	*2*
CME83	4010901019	CURVA DI SCARICO ORIENT. STAR D 80	REVOLVING ELBOW - STAR D 80	*2*
CMEC83	4010901020	CURVA DI SCARICO ORIENT. STAR D 100	REVOLVING ELBOW - STAR D 100	*2*
CM86	5050707015	CHIAVETTA 8X7X40	KEY - 8X7X40	*1*
CM87	5020107002	PRESA CALETTATA FORO D 32 -Ø 1"3/8	SPLINED HUB HOLE D 32 - MEC 6500/8000	*1*
CM88	4010401063	FLANGIA ANT. MEC 9000-11000-13500/H	FRONT FLANGE - MEC 9-13500 /H	*1*
CM93	5051206001	GOLFARO MASCHIO M 10	MALE EYEBOLT - M 10	*1*
CM94	4010601154	COPERCHIO SCATOLA MOLT. MEC 9-11-13500	GEARBOX COVER - MEC 9-13500	*1*
CM95	4060505000	PROTEZIONE ALBERO CE	SHAFT GUARD - CE	*1*
CM96	5050906006	TAPPO D 16x1.5 - DIN 908 -	PLUG - D 16X1	*2*
CM97	5050202007	RONDELLA D 16X20X1,5 ALLUMINIO	ALUMINIUM WASHER - D 16X20X1,5	*2*
CM98	5050107028	VITE M 12X35 TE	SCREW - M 12X35 TE	*4*
CM99	5050207005	RONDELLA D 12	SMOOTH WASHER - D 12	*4*
CM100	4010401062	FLANGIA SUPPORTO DEC. MEC 9-11-13500/G	PUMP SUPP. FLANGE MEC 9-11-13500	*1*

CM101	5050207003	RONDELLA D 8	SMOOTH WASHER - D 8	3
CM102/G	4020607005	PIGNONE DEC. GARDA MEC 6,5-8000 Z39-M3	GARDA PINION - Z39-M3 MEC 6,5-8000	1
CM102/GA	4020607017	PIGNONE DEC. GARDA MEC 8000 GA Z50-M3	GARDA PINION - Z50-M3 MEC 6,5-8000 GA	1
CM103	5050107026	VITE M 10X25 TCEI	SCREW - M 10X25 TCEI	6
CM106	5060605013	TAPPO CARICO OLIO 18 MM - MEC II -	OIL PLUG 18 MM - MEC II	1
CM108	5050107107	VITE M 6x10 TEF - FL/ZIGR 8.8 -	GALVANIZED SCREW - M 6X10 TEF	4
CM109	5050507011	ANELLO SEEGER D 80 I	CIRCLIP - D 80 I	1
CM110	4010007038	TUBO COLL.COMPRESS-RACC BALLAST MEC 9-11	BALLAST CONNECTORE - MEC9-11-13500	2
CM111	5040407005	RACCORDO CURVO M/M 1/2" GAS	CURVED CONNECTOR - M/M 1/2" GAS	2
CM112	4010007021	TUBO PER FILTRI BALLAST SYSTEM	HOSE FOR FILTER - BALLAST SYSTEM	2
CM113	6100200029	VALVOLA UNIDIREZIONALE D 1/2" BALLAST	UNIDIRECTIONAL VALVE - BALLAST D 1/2"	2
CM114	4010007037	SOSTEGNO TUBI ASP. BALLAST MEC9-11-13500	BALLAST HOSES SUPPORT - MEC9-11-13500	1
CM115	5050107123	VITE M 8X25 TE - 10.9	SCREW - M 8X25 TE - 10.9	3
CM116	5050107109	VITE M 10X25 TEF - FL/ZIGR 8.8 -	SCREW - M 10X25 TEF - FL/ZIGR 8.8	19
CM117	5050107108	VITE M 8X25 TEF - FL/ZIGR 8.8 -	SCREW - M 8X25 TEF - FL/ZIGR 8.8	17
CM118	5030210063	ANELLO TENUTA OR 177.47X2.62 - GAR. 9-13	SEAL RING - OR 177.47X2.62 MEC 9-13500/G	1
CM119	4010601153	COPERCHIO ANTERIORE MEC 5-13500 /P-AL	FRONT COVER - MEC 5-13500/P AL	1
CM120	4010601101	COPERCHIO ANTERIORE CE MEC 2-13500/D	FRONT COVER - CE MEC 2-4000/D	1
CM121	4060505039	SPIA LIVELLO OLIO MEC 9000-11000-13500	OIL LEVEL INDICATOR MEC 9000-11000-13500	1
CM124	4050412013	PRIGIONIERO M 10X130	STUD BOLT - M 10X130	2
CM125	5050307003	DADO M 10	NUT - M 10	2
CM126	4030108028	GUARN. SUPP. MOTORE IDR. GRUPPO 4	HYDRAULIC MOTOR SUPPORT GASKET - GR4	1
CM127	5050903003	TAPPO D. 1/8" - DIN 906	PLUG - D 1/8"	3
CM128	5050903004	TAPPO M 10x1 - CON SFIATO	PLUG - M 10X1 WITH AIR RELEASING	1
CM129	5060010020	POMOLO LEVA SPECIALE UNI 707 M14X25	HANDLE KNOB - D 14X25 EN 707	2
CM130	4011912012	PERNO MANIGLIA UNI 707 MEC 2/8000-STAR	HANDLE PIN - MEC 2-8000 STAR - EN 707	1
CM131	4010007035	SOSTEGNO MANIGLIA UNI 707 STAR	SUPPORT FOR HANDLE UNI 707 STAR	1
CM132	4010801028	MANIGLIA MEC 9000-13500 UNI 707	HANDLE - MEC 9-13500 EN 707	1
CM133	4011707069	RONDELLA LEVA UNI 707 MEC 9-11-13500	WASHER FOR LEVER - MEC 9-13500 EN 707	1
CM134	5050107099	VITE ZINCATA M 10X45 TE	GALVANIZED SCREW - M 10X45 TE	1
CM135	5050207024	RONDELLA D 10 ZINCATA	GALVANIZED FLAT WASHER - D 10	4
CM136	5050300009	DADO AUTOBLOCCANTE M 10	SELF-LOCKING NUT - M 10	1
CM137	4011001046	SUPPORTO ATTUATORE PNEUM. STAR PLUS	PNEUM. REV. CYLINDER SUPP. (PLUS) - AGRI	1
CM138	5090000050	CILINDRO ROTATIVO PNEUMATICO DA 60 PLUS	PNEUM. REV. CYLINDER - DA 60- PUMPS - P	1
CM139	4011907059	PERNO COLL. ATT. PN. PLUS SE-WPT	PNEUM. REV. HOUS. CONN. PIN - SE-WPT (PL	1
CM140	4010701010	CONO INVERTITORE STAR - WPT	REVERSING GEAR - STAR - WPT	1
CM141	5051007012	GRANO DI FERMO M 12X20 P.CIL. ATTUATORE	DOWEL - M 12X20 P.CIL. - REV. CYLINDER	1
CM142	5050307004	DADO M 12	NUT - M 12	1
CM143	5050207002	RONDELLA D 6	WASHER D 6	4
CM144	5050107006	VITE M 6X20 TE	SCREW M 6X20 TE	4
CM145	5050107021	VITE M 10X30 TE	SCREW M 10X30 TE	4
CM146	5050207005	RONDELLA D 12	WASHER D 12	4
CM147	4011001070	SUPPORTO CILINDRO IDR.(PISTON)MEC9-13500	HYDR. HANDLE SUPPORT MEC 9-13500	1
CM148	5090000077	CILINDRO IDRAULICO DA MEC 5-13500	HYDRAULIC CYLINDER FOR HANDLE MEC5-13500	1
CM149	4011907088	SPINOTTO LATERALE MEC9-13500 CIL.IDRAUL.	SIDE PIN FOR HYDR.HANDLE MEC 9-13500	1
CM150	5050507021	COPPIGLIA A MOLLA 2.5X58	COTTER PIN 2.5X58	1
CM151	4010801029	MANIGLIA MEC 9000-13500 IDRAULICA	HANDLE - MEC 9-13500	1
CM152	5050300013	DADO AUTOBLOCCANTE M 12 BASSO - DIN 985	SELF-LOCKING NUT M 12	1
CM153	5050107060	VITE M 12X50 TE	SCREW M 12X50 TE	1
CM122	6010201045	KIT REVISIONE POMPA MEC 9000 LONG LIFE	REBUILD KIT - MEC 9000 LONG LIFE	1
CME122	6010201046	KIT REVISIONE POMPA MEC 11000 LONG LIFE	REBUILD KIT - MEC 11000 LONG LIFE	1
CMEC122	6010201047	KIT REVISIONE POMPA MEC 13500 LONG LIFE	REBUILD KIT - MEC 13500 LONG LIFE	1
CM122/BALLAST	6010201048	KIT REVISIONE POMPA MEC 9000 BALLAST	REBUILD KIT - MEC 9000 BALLAST	1
CME122/BAL	6010201049	KIT REVISIONE POMPA MEC 11000 BALLAST	REBUILD KIT - MEC 11000 BALLAST	1
CMEC122/BAL	6010201050	KIT REVISIONE POMPA MEC 13500 BALLAST	REBUILD KIT - MEC 13500 BALLAST	1
CM122/SC	6010201051	KIT REVISIONE POMPA MEC 9000 M S.C.	REBUILD KIT - MEC 9000 M S.C.	1
CME122/SC	6010201052	KIT REVISIONE POMPA MEC 11000 M S.C.	REBUILD KIT - MEC 11000 M S.C.	1
CMEC122/SC	6010201053	KIT REVISIONE POMPA MEC 13500 M S.C.	REBUILD KIT - MEC 13500 M S.C.	1
LUBR_OIL	5070200100	OLIO BATTIONI PAGANI POMPE (5LT)	BATTIONI PAGANI VACUUM PUMP OIL (5LT)	1

KD

KD-14000

KDP

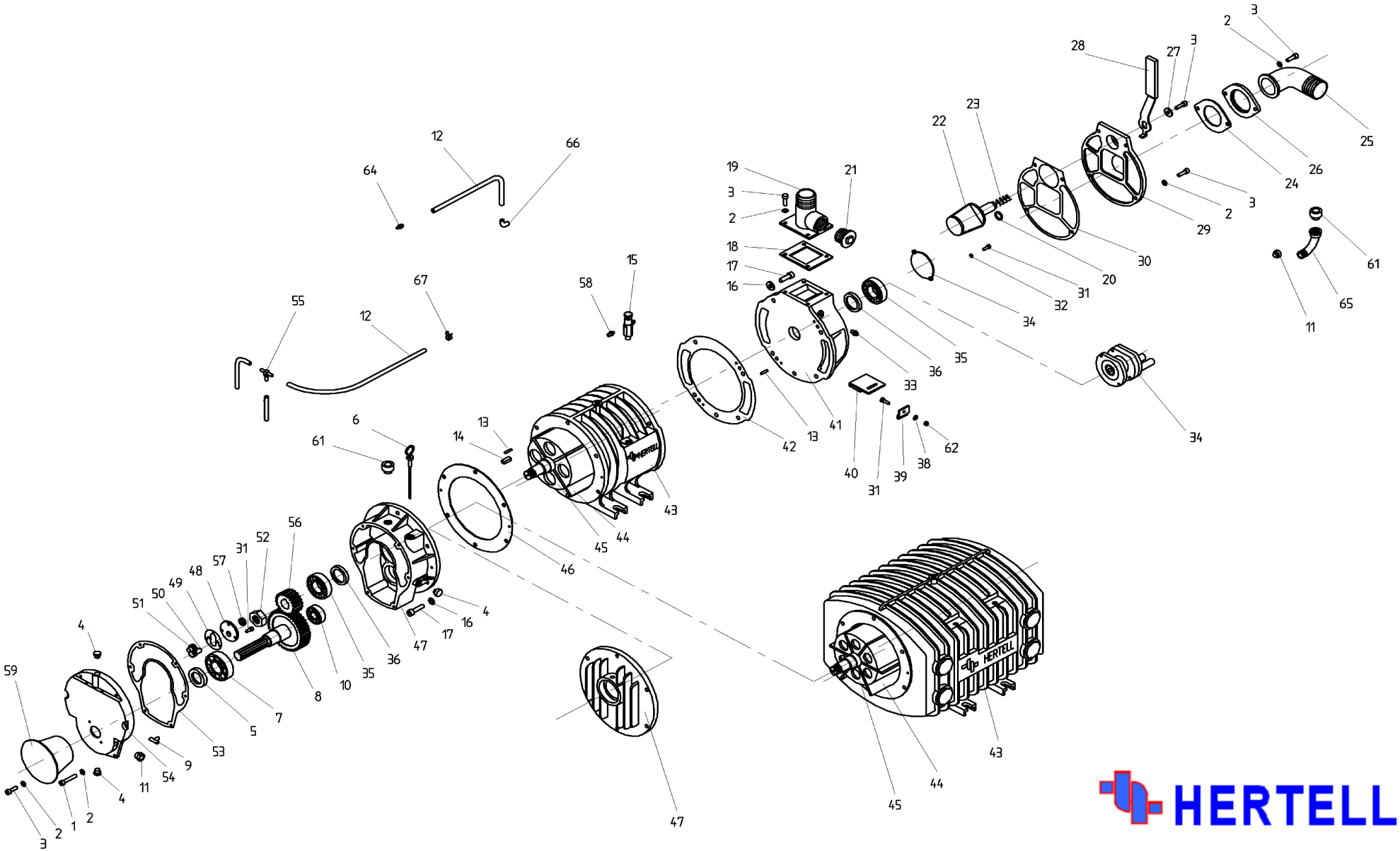

HERTELL

Ref.	Denomination
01KD050001	N. 1. Screw for KD-3000/5000
01KD140001	N. 1. Screw for KD-6500/14000
01KD140002	N. 2. Washer for KD-3000/14000
01KD140003	N. 3. Screw for KD-3000/14000
01KD140004	N. 4. Plug for KD-3000/14000
01KD140005	N. 5. Seal for KD-3000/14000 35x55x10
01KD140006	N. 6. Oil level indicator KD-3000/14000
01KD050007	N. 7. Bearing for KD-3000/5000 6207
01KD140007	N. 7. Bearing for KD-6500/14000 6307
01KD050008	N. 8. Attack gear 49 teeth KD-3000/5000
01KD140008	N. 8. Attack gear 55 teeth KD-6500/14000
01KD141008	N. 8. Attack gear 1000 rpm KD-6500/14000
01KD140009	N. 9. Nipple 90 for KD-3000/14000
01KD140010	N.10. Bearing for KD-3000/14000 6304
01KD140011	N.11. Oil sight glass KD-3000/14000
01KD030012	N.12. Oil tube for KD- 3000
01KD040012	N.12. Oil tube for KD- 4000
01KD050012	N.12. Oil tube for KD- 5000
01KD060012	N.12. Oil tube for KD- 6500
01KD080012	N.12. Oil tube for KD- 8000
01KD100012	N.12. Oil tube for KD-10000
01KD120012	N.12. Oil tube for KD-12000
01KD140012	N.12. Oil tube for KD-14000
01KD140013	N.13. Elastic pin for KD-3000/14000
01KD050014	N.14. Key for KD-3000/5000
01KD140014	N.14. Key for KD-6500/14000
01KD140015	N.15. Drop feeder for KD-3000/14000
01KD140016	N.16. Washer for KD-3000/14000
01KD140017	N.17. Screw for KD-3000/14000
01KD050018	N.18. Gasket for KD-3000/5000
01KD140018	N.18. Gasket for KD-6500/14000
01KD050019	N.19. Outlet Ø 60 KD-3000/5000
01KD060019	N.19. Outlet Ø 60 KD-6500
01KD140019	N.19. Outlet Ø 80 KD-6500/14000
01KD141019	N.19. Outlet Ø 100 KD-14000
01KD052019	N.19. Double outlet Ø 60 KD-3000/5000
01KD062019	N.19. Double outlet Ø 60 KD-6500
01KD142019	N.19. Double outlet Ø 80 KD-6500/14000
01KD140020	N.20. O-Ring for KD-3000/14000
01KD140021	N.21. Plug for KD-3000/14000
01KD050022	N.22. Conic distributor for KD-3000/5000
01KD140022	N.22. Conic distributor for KD-6500/14000
01KD140023	N.23. Spring for KD-3000/14000
01KD140024	N.24. Outlet gasket KD-3000/14000
01KD140025	N.25. Outlet for KD-3000/14000
01KD140026	N.26. Flange for KD-3000/14000
01KD140027	N.27. Washer for KD-3000/14000
01KD140028	N.28. Handle for KD-3000/14000
01KD050029	N.29. Distributor cover KD- 3000/5000
01KD120029	N.29. Distributor cover KD- 6500/12000
01KD140029	N.29. Distributor cover KD-14000
01KD050030	N.30. Gasket for KD-3000/5000
01KD140030	N.30. Gasket for KD-6500/14000
01KD140031	N.31. Screw for KD-3000/14000
01KD140032	N.32. Washer for KD-3000/14000
01KD140033	N.33. Lubrication nipple for KD-3000/14000
01KD050034	N.34. Bearing cover for KD-6500/14000
01KD140034	N.34. Bearing cover for KD-3000/5000
01KD141034	N.34. Water pump for KD-14000
01KD050035	N.35. Bearing for KD-3000/5000 6207
01KD140035	N.35. Bearing for KD-6500/14000 6208
01KD050036	N.36. Seal for KD-3000/5000 40x55x8
01KD140036	N.36. Seal for KD-6500/14000 45x60x12
01KD140037	N.37. Plug M6 for KD-3000/14000
01KD140038	N.38. Copper washer KD-3000/14000
01KD140039	N.39. Hinge for KD-3000/14000
01KD050040	N.40. Plug forKD-3000/5000
01KD140040	N.40. Plug for KD-6500/14000
01KD050041	N.41. Distributor for KD- 3000/5000
01KD120041	N.41. Distributor for KD- 6500/12000
01KD140041	N.41. Distributor for KD-14000
01KD050042	N.42. Gasket for KD-3000/5000
01KD140042	N.42. Gasket for KD-6500/14000
01KD030043	N.43. Body for KD- 3000
01KD040043	N.43. Body for KD- 4000
01KD050043	N.43. Body for KD- 5000
01KD060043	N.43. Body for KD- 6500
01KD080043	N.43. Body for KD- 8000
01KD100043	N.43. Body for KD-10000
01KD120043	N.43. Body for KD-12000
01KD140043	N.43. Body for KD-12000
01KD030044	N.44. Vane for KD- 3000 (160x57x7,5) 4
01KD040044	N.44. Vane for KD- 4000 (210x57x7,5) 4
01KD050044	N.44. Vane for KD- 5000 (265x57x7,5) 4
01KD060044	N.44. Vane for KD- 6500 (240x64x7,5) 6
01KD080044	N.44. Vane for KD- 8000 (300x64x7,5) 6
01KD100044	N.44. Vane for KD-10000 (360x64x7,5) 6
01KD140044	N.44. Vane for KD-12/14000 (425x64x7,5) 6
01KD030045	N.45. Rotor for KD- 3000
01KD040045	N.45. Rotor for KD- 4000
01KD050045	N.45. Rotor for KD- 5000
01KD060045	N.45. Rotor for KD- 6500
01KD080045	N.45. Rotor for KD- 8000
01KD100045	N.45. Rotor for KD-10000
01KD120045	N.45. Rotor for KD-12000
01KD140045	N.45. Rotor for KD-14000
01KD050046	N.46. Gasket for KD-3000/5000
01KD140046	N.46. Gasket for KD-6500/14000
01KD050047	N.47. Gearbox for KD-3000/5000
01KD140047	N.47. Gearbox for KD-6500/14000
01KP050047	N.47. End cover for KDP-3000/5000
01KP120047	N.47. End cover for KDP-6500/12000
01KD140048	N.48. Oil pump cover KD-3000/14000
01KD140049	N.49. Oil pump gasket KD-3000/14000
01KD140050	N.50. Oil pump attack gear KD-3000/14000
01KD140051	N.51. Oil pump gear KD-3000/14000
01KD140052	N.52. Lock nut for KD-3000/14000
01KD050053	N.53. Gasket for KD-3000/5000
01KD140053	N.53. Gasket for KD-6500/14000
01KD050054	N.54. Gearbox cover for KD-3000/5000
01KD140054	N.54. Gearbox cover for KD-6500/14000
01KD140055	N.55. T-connection for KD-3000/14000
01KD050056	N.56. Small gear 19 teeth KD-3000/5000
01KD140056	N.56. Small gear 28 teeth KD-6500/14000
01KD141056	N.56. Small gear 1000 rpm KD-6500/14000
01KD140057	N.57. Seal for KD-3000/14000 12x20x5
01KD140058	N.58. Pipette for KD-3000/14000
01KP120058	N.58. Nipple for KDP-3000/12000
01KD140059	N.59. PTO Guard for KD-3000/14000
01KD140060	N.60. Rotor plug for KD-3000/14000
01KD140061	N.61. 1/2" plug para KD-3000/14000
01KD140062	N.62. Nut for KD-3000/14000
01KD140063	N.63. PTO Guard screw KD-3000/14000
01KP120064	N.64. Nipple for KDP-3000/12000
01KP120065	N.65. Elbow 1/2 for KDP-3000/12000
01KP120066	N.66. Nipple 1/8K for KDP-3000/12000
01KD140067	N.67. Bracket for KD-3000/14000
01KD050099	N.99. Accessories kit for KD-3000/5000
01KD060099	N.99. Accessories kit for KD-6500
01KD140099	N.99. Accessories kit for KD-6500/14000

MEC8000M HYDRAULIC CHANGE OVER KIT

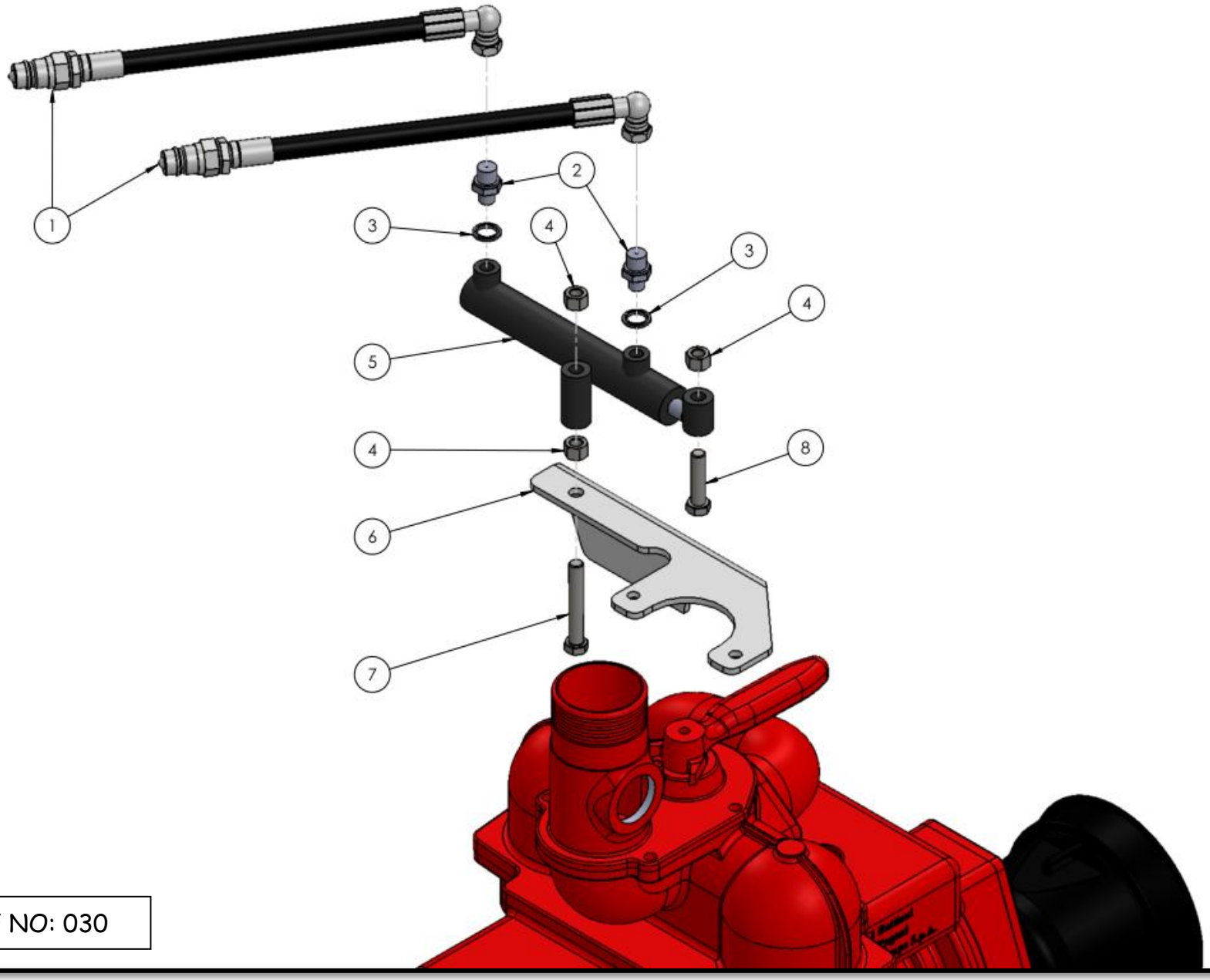

SEE TABLE NO: 030

TABLE NO: 030 MEC8000M HYDRAULIC CHANGE OVER KIT			
		ZTAN56	
ITEM NO	DESCRIPTION	CODE	QTY
1	7’ HYDRAULIC HOSE	ZHYD02	2
2	RESTRICTOR	ZHYD78	2
3	DOWDY WASHER	ZHYD08	2
4	M12 NYLOCK NUT	ZFAS23	3
5	HYDRAULIC CYCLINDER	ZHYD65	1
6	SUPPORT PLATE	ZPPA673	1
7	M12X80 SETSCREW	ZFAS53	1
8	M12X60 BOLT ZP	ZFAS100	1

MEC11,000M HYDRAULIC CHANGE OVER KIT

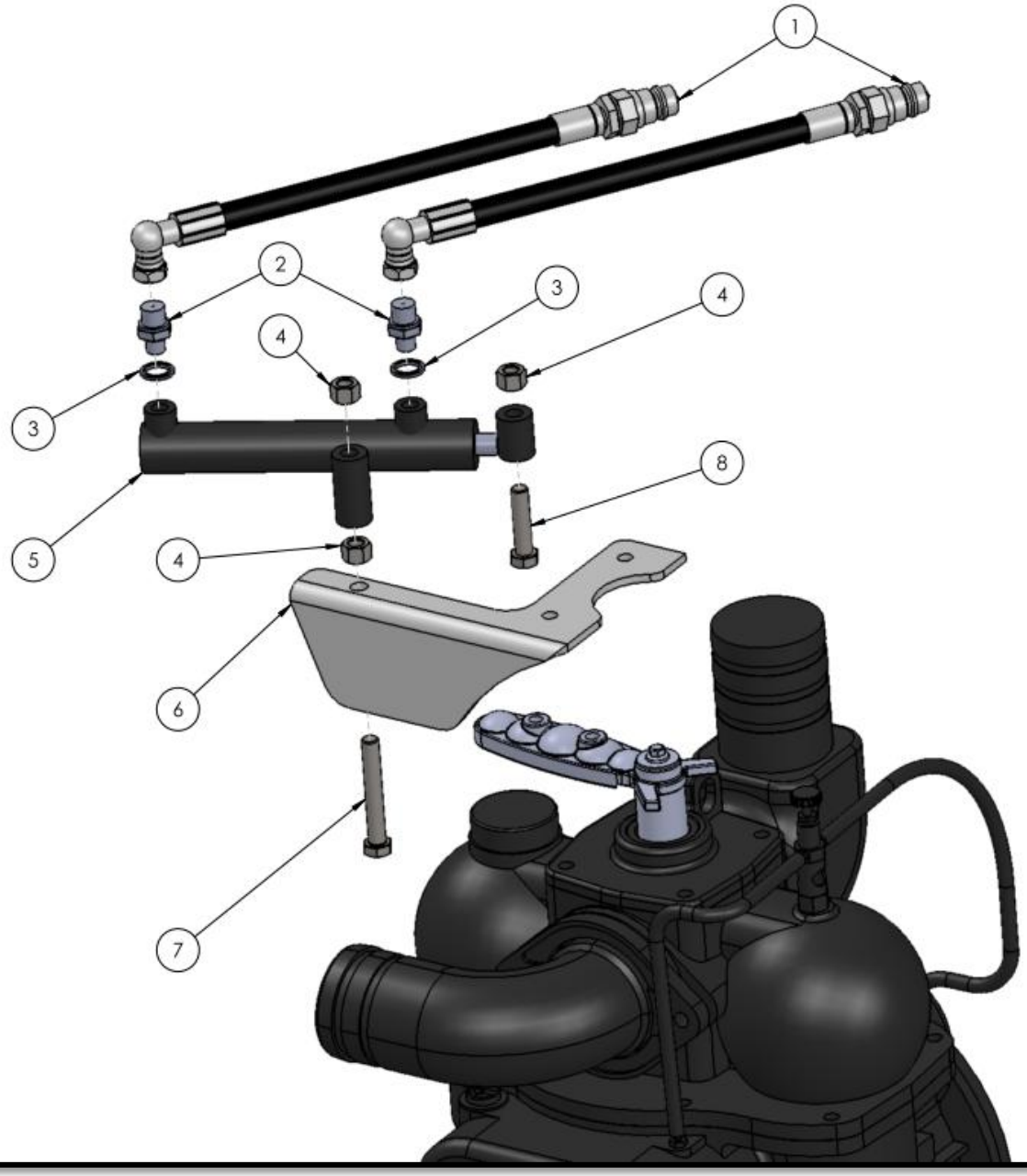

SEE TABLE NO: 031

TABLE NO: 031 MEC11000M HYDRAULIC CHANGE OVER KIT			
		ZTAN57	
ITEM NO	DESCRIPTION	CODE	QTY
1	7’ HYDRAULIC HOSE	ZHYD02	2
2	RESTRICTOR	ZHYD78	2
3	DOWDY WASHER	ZHYD08	2
4	M12 NYLOCK NUT	ZFAS23	3
5	HYDRAULIC CYCLINDER	ZHYD65	1
6	SUPPORT PLATE	ZPPA674	1
7	M12X80 SETSCREW	ZFAS53	1
8	M12X60 BOLT ZP	ZFAS100	1