FLEMING

MACHINERY FOR AGRICULTURE
AND COUNTRYSIDE CARE

MS700/MS1000 SPARE PARTS LISTS

MS700/MS1000 ASSEMBLY:

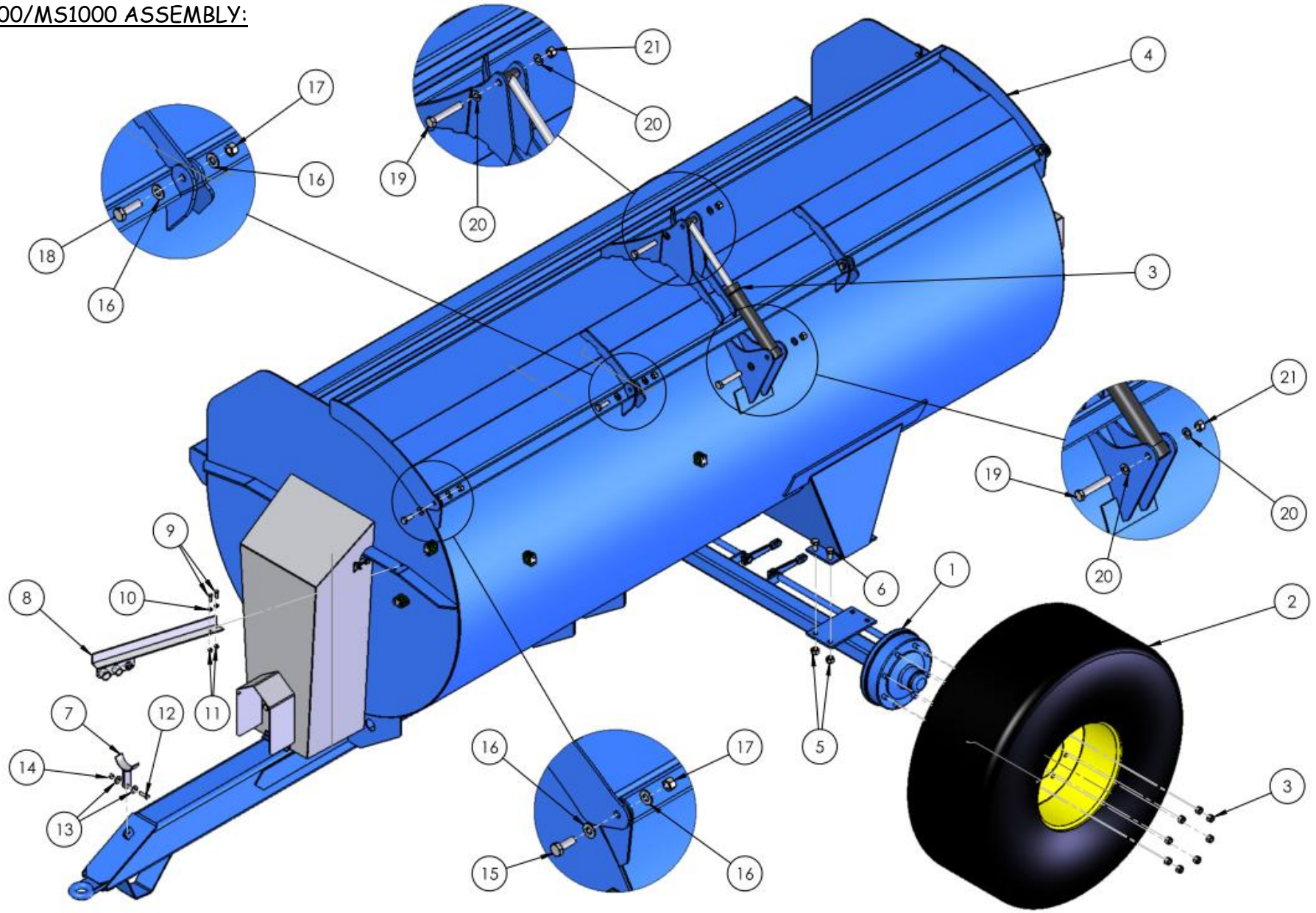

SEE TABLE NO: 010

TABLE NO: 010 M700/MS1000 SIDE SPREADER ASSEMBLY					
ITEM NO	DESCRIPTION	MS700		MS1000	
		CODE	QTY	CODE	QTY
1	BRAKED AXLE	ZGPP120	1	ZGPP17	1
2	COMPLETE WHEEL	ZGPP119	2	ZGPP16	2
2	OPTIONAL WHEEL 550x45x22.5 6 STUD	ZGPP49	2	N/A	
3	AXLE NUT 18mmx1.5mm	AX-181.5	12	AX-181.5	16
4	LID	P001.336	1	PAGE 20-22	1
5	M20 NYLOCK NUT ZP	ZFAS24	8	ZFAS24	8
6	M20X45 SET SCREW ZP	ZFAS12	8	ZFAS12	8
7	PTO SHAFT HOLDER	P001.314	1	P001.314	1
8	HOSE HOLDER	P001.337	1	P001.338	1
9	M10X40 SET SCREW ZP	ZFAS105	2	ZFAS105	2
10	M10 WASHER ZP	ZFAS03	4	ZFAS03	4
11	M10 NYLOCK NUT	ZFAS20	2	ZFAS20	2
12	M12X40 SET SCREW ZP	ZFAS51	1	ZFAS51	1
13	M12 WASHER ZP	ZFAS45	2	ZFAS45	2
14	M12 NYLOCK NUT	ZFAS22	1	ZFAS22	1
15	M16X55 SET SCREW ZP	ZFAS62	2	ZFAS62	2
16	M16 WASHER ZP	ZFAS36	8	ZFAS36	8
17	M16 NYLOCK NUT	ZFAS23	4	ZFAS23	4
18	M16X60 SET SCREW ZP	ZFAS82	2	ZFAS82	2
19	M18X120 BOLT ZP	ZFAS110	2	ZFAS110	2
20	M18 WASHER ZP	ZFAS111	4	ZFAS111	4
21	M18 NYLOCK NUT	ZFAS80	2	ZFAS80	2
22	STICKER KIT	P001.542	1	P001.543	1

MS70 SIDE SPREADER LID 2005-2009

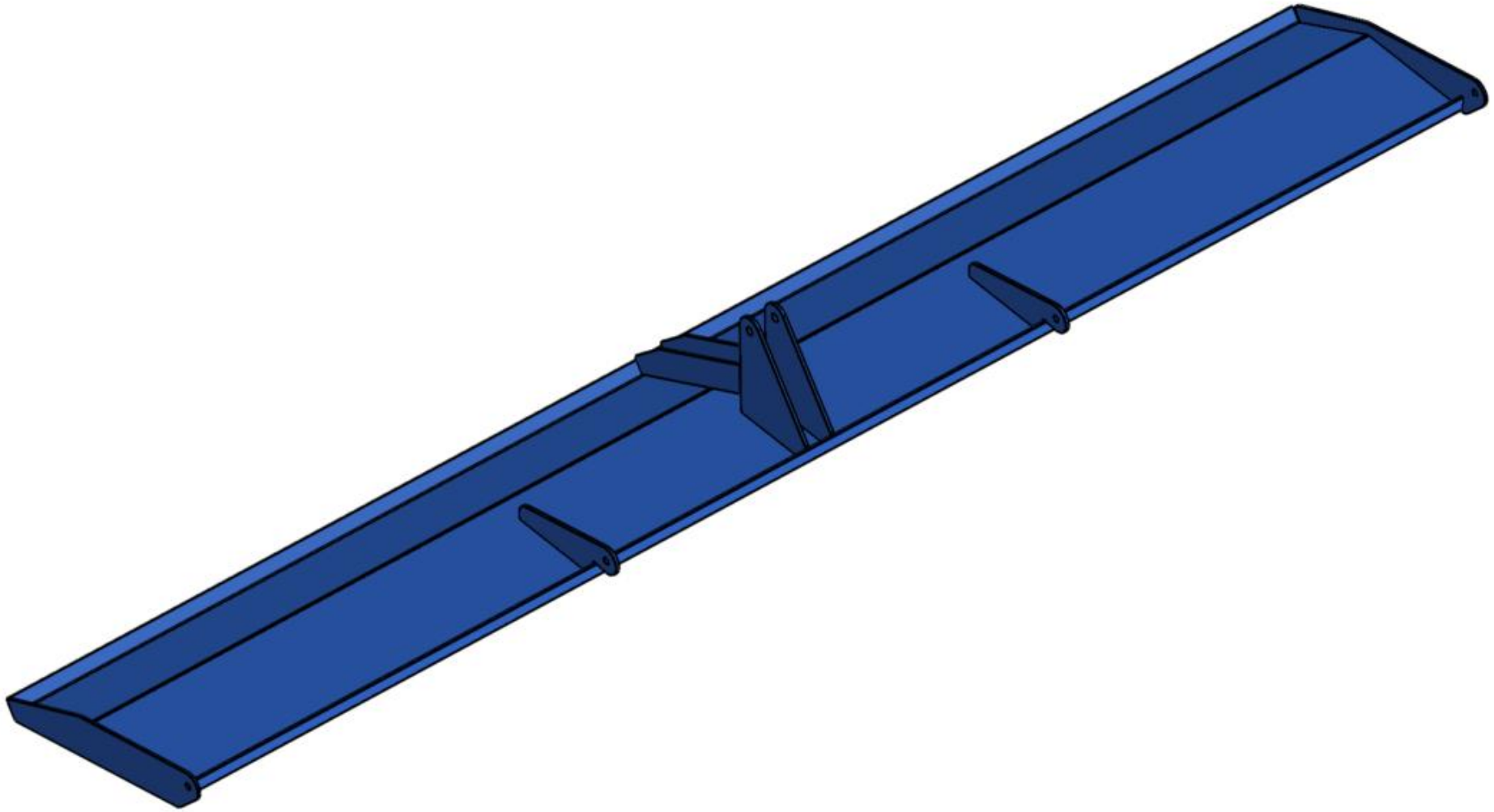

PART NO: P001.339

MS70 SIDE SPREADER LID 2009-2012

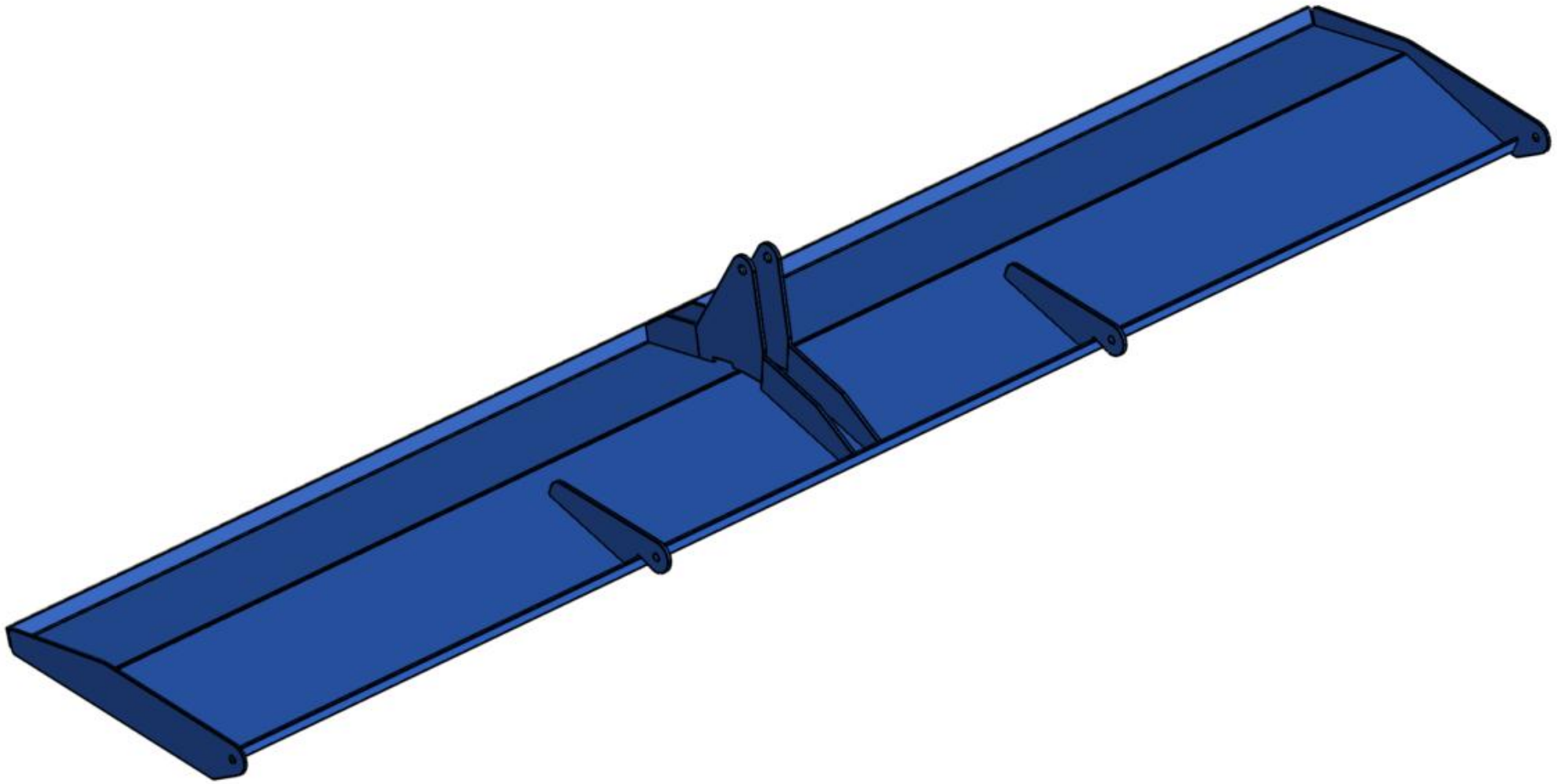

PART NO: P001.340

MS1000 SIDE SPREADER LID 2012 ONWARDS

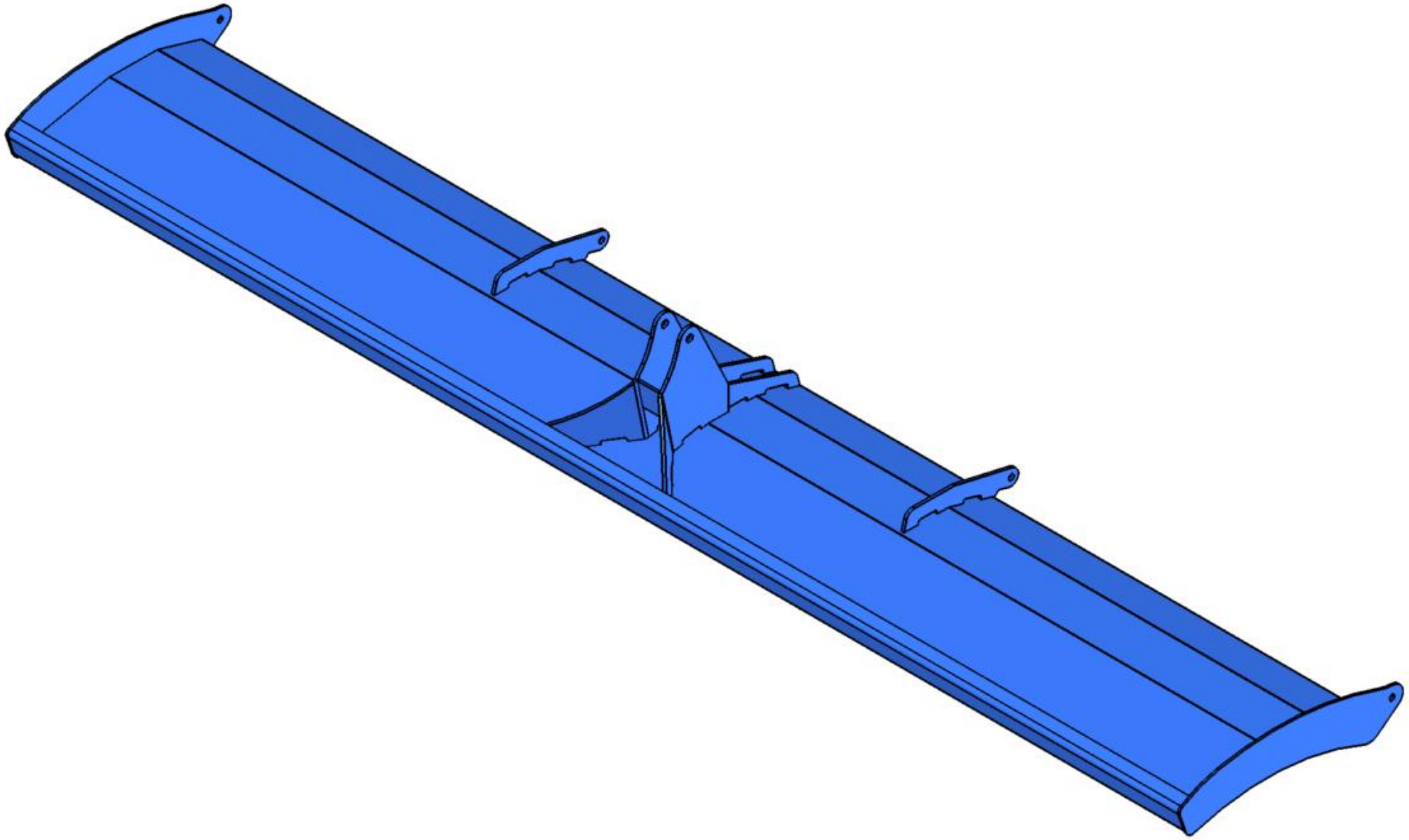

PART NO: P001.341

MS700/MS1000 FRONT VIEW

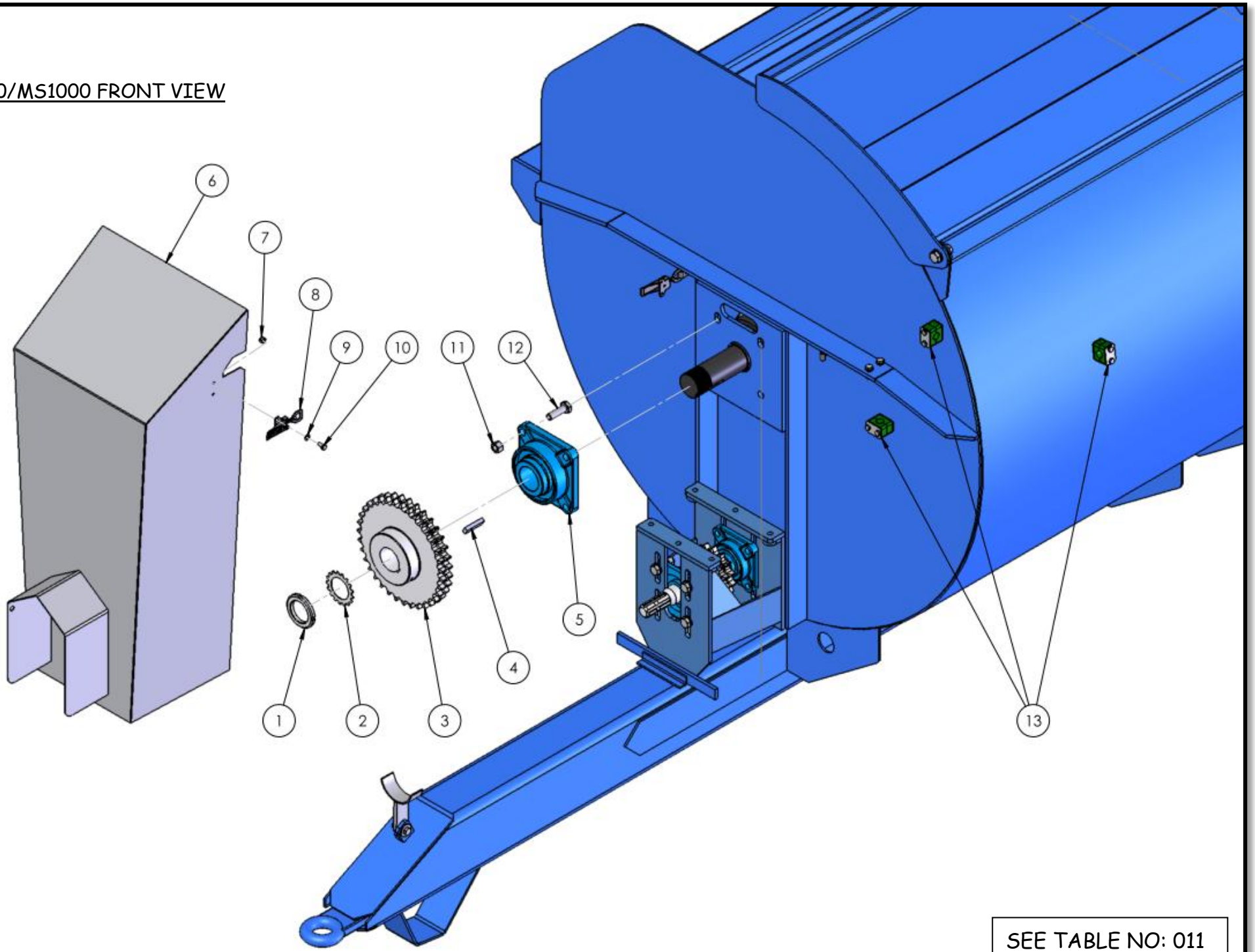

SEE TABLE NO: 011

TABLE NO: 011 M700/MS1000 SIDE SPREADER FRONT VIEW					
		MS700		MS1000	
ITEM NO	DESCRIPTION	CODE	QTY	CODE	QTY
1	LOCK NUT	ZFAS77	1	ZFAS94	1
2	TAB WASHER	ZFAS78	1	ZFAS95	1
3	SPROCKET	ZDRI01	1	ZDRI03	1
4	KEYWAY	P001.317	1	P001.317	1
5	BEARING	ZDRI09	1	ZDRI08	1
6	GEARBOX COVER	P001.342	1	P001.343	1
7	M5 NYLOCK NUT ZP	ZFAS114	4	ZFAS114	4
8	LATCH	ZGPP211	2	ZGPP211	2
9	M5 WASHER ZP	ZFAS113	4	ZFAS113	4
10	M5X20 SET SCREW ZP	ZFAS112	4	ZFAS112	4
11	M16 NYLOCK NUT ZP	ZFAS23	4	ZFAS23	4
12	M16X55 SET SCREW ZP	ZFAS62	4	ZFAS62	4
13	3/8” SINGLE HOSE HOLDER	ZHYD16	3	ZHYD16	3

MS700/MS1000 REAR VIEW

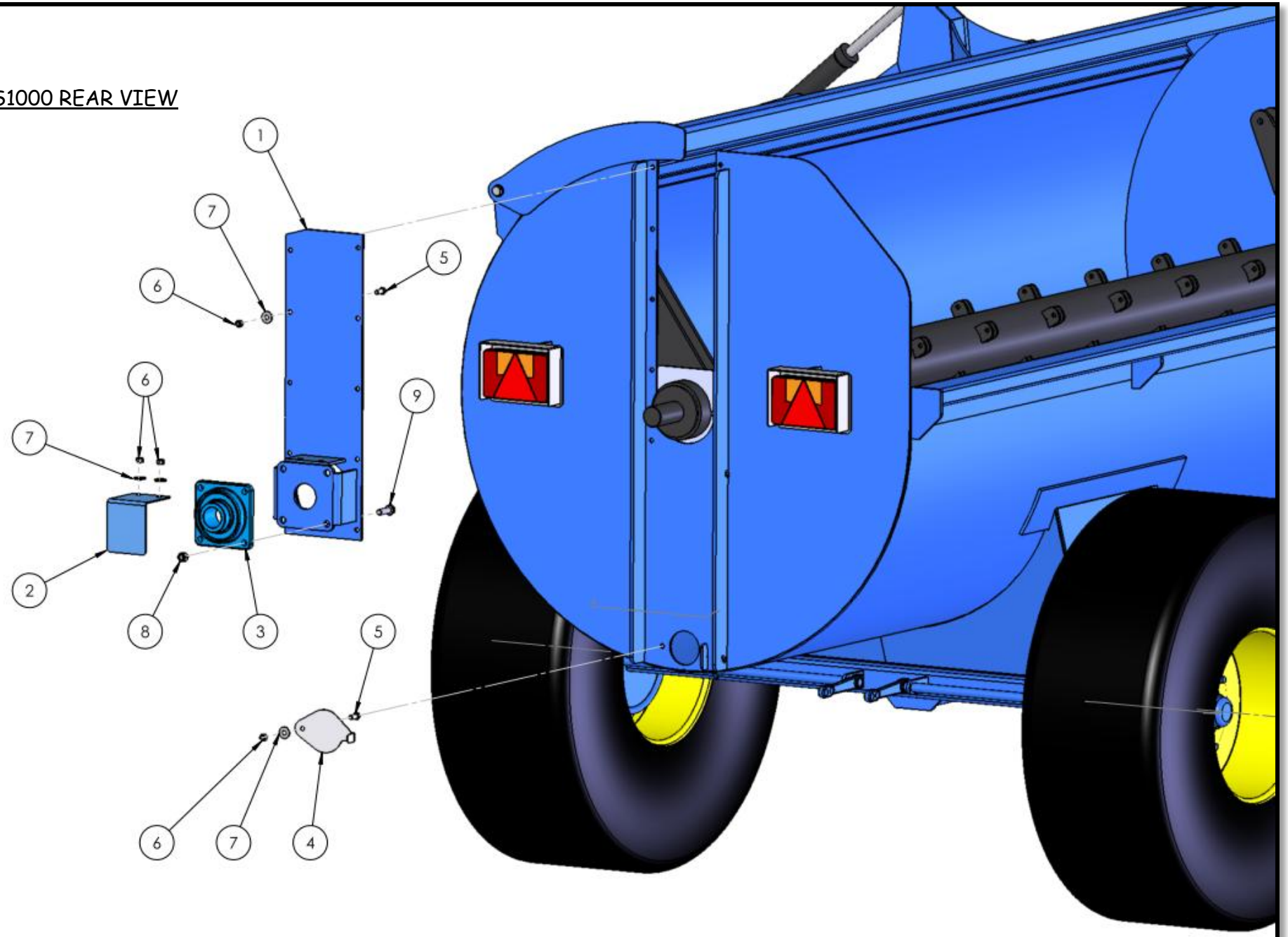

SEE TABLE NO: 012

TABLE NO: 012 M700/MS1000 SIDE SPREADER REAR VIEW					
		MS700		MS1000	
ITEM NO	DESCRIPTION	CODE	QTY	CODE	QTY
1	BEARING SUPPORT PLATE	P001.344	1	P001.345	1
2	BEARING COVER	P001.346	1	P001.346	1
3	BEARING	ZDRI10	1	ZDRI09	1
4	DRAIN COVER	P001.325	1	P001.325	1
5	M12X30 SET SCREW ZP	ZFAS10	11	ZFAS10	11
6	M12 NYLOCK	ZFAS23	11	ZFAS23	11
7	M12 WASHER ZP	ZFAS45	11	ZFAS45	11
8	M16 NYLOCK NUT	ZFAS23	4	ZFAS23	4
9	M16X55 SET SCREW ZP	ZFAS62	4	ZFAS62	4

MS700/MS1000 LIGHTS DIAGRAM

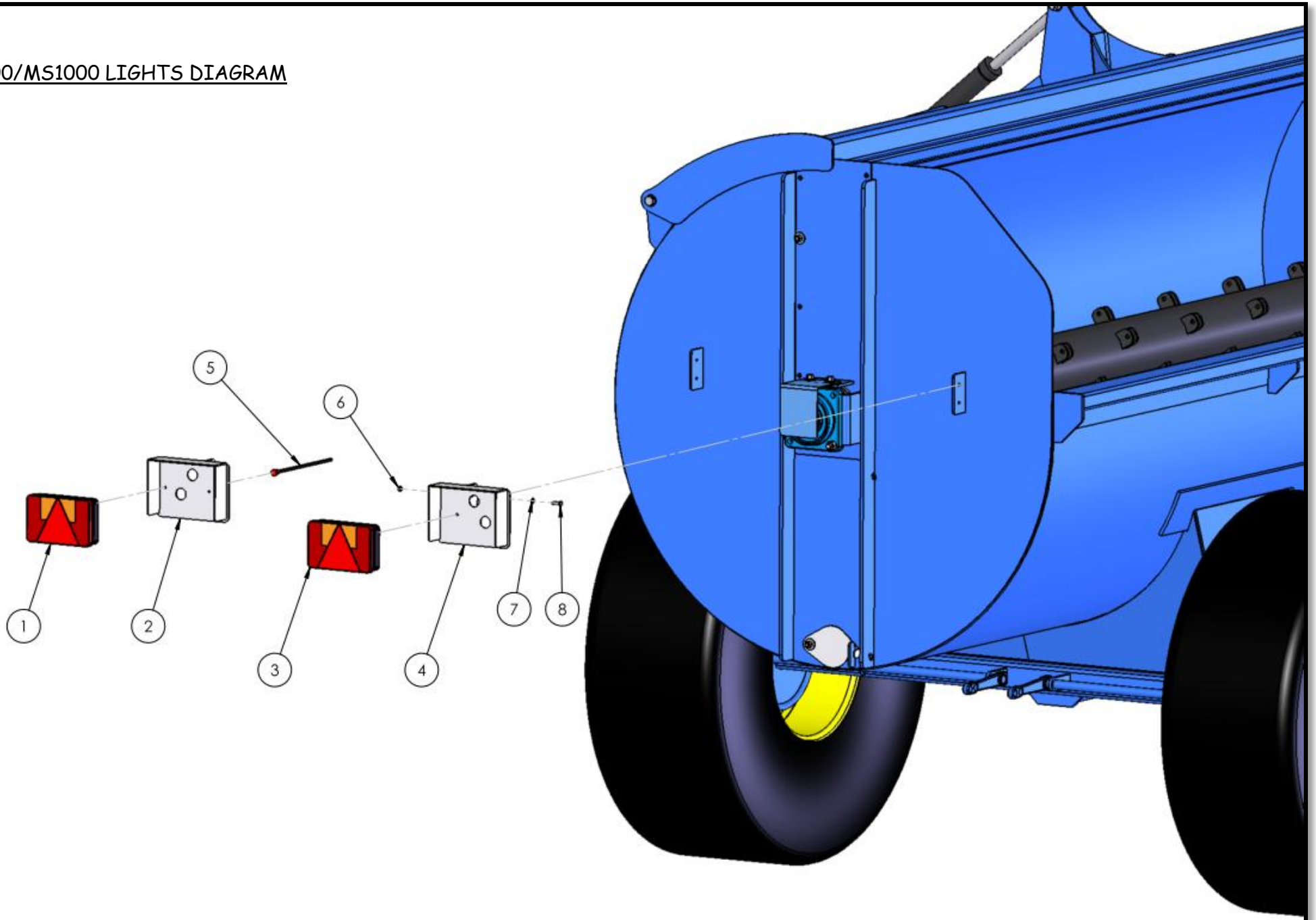

SEE TABLE NO: 013

TABLE NO: 013 M700/MS1000 SIDE SPREADER LIGHTS DIAGRAM					
ITEM NO	DESCRIPTION	MS700		MS1000	
		CODE	QTY	CODE	QTY
1	LHD TAIL LIGHT	ZGPP180	1	ZGPP180	1
2	LHD TAIL LIGHT HOLDER	P001.347	1	P001.347	1
3	RHD TAIL LIGHT	ZGPP181	1	ZGPP181	1
4	RHD TAIL LIGHT HOLDER	P001.348	1	P001.348	1
5	WIRING LOOM	ZGPP179	1	ZGPP179	1
6	M8 NYLOCK ZP	ZFAS55	4	ZFAS55	4
7	M8 WASHER ZP	ZFAS132	4	ZFAS132	4
8	M8X35 SET SCREW ZP	ZFAS103	4	ZFAS103	4

MS700/MS1000 SIDE SPREADER ROTOR ASSEMBLY

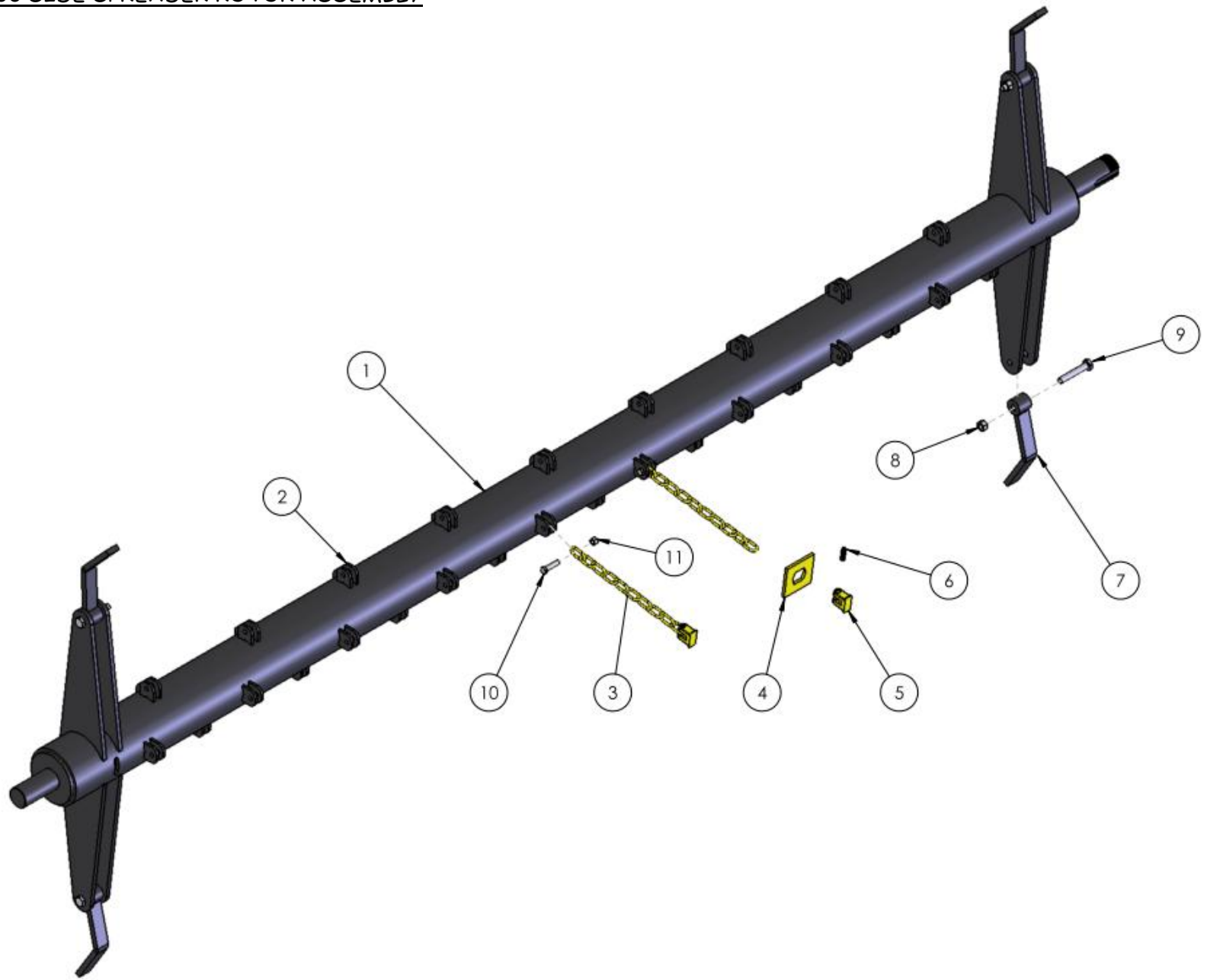

SEE TABLE NO: 014

TABLE NO: 014 M700/MS1000 SIDE SPREADER ROTOR ASSEMBLY					
		MS700		MS1000	
ITEM NO	DESCRIPTION	CODE	QTY	CODE	QTY
1	ROTOR	P001.349	1	P001.350	1
2	CHAIN HOLDER	ZPPA248	56	ZPPA311	72
3	MUCK SPREADER CHAIN PLUS WEIGHT	ZGPP122	28	ZGPP129	36
4	MUCKSPREADER PLATE	ZGPP128	28	ZGPP128	36
5	MUCKSPREADER WEIGHT	MSW	28	MSW	36
6	MUCKSPREADER ROLL PIN	MSWP	28	MSWP	36
7	STARTER BAR	P001.351	4	P001.351	4
8	M16 NYLOCK NUT	ZFAS23	4	ZFAS23	4
9	M16X100 BOLT ZP	ZFAS81	4	ZFAS81	4
10	M12X50 BOLT ZP	ZFAS15	28	ZFAS15	36
11	M12 NYLOCK NUT	ZFAS22	28	ZFAS22	36

MS700/MS1000 SIDE SPREADER GEARBOX ASSEMBLY

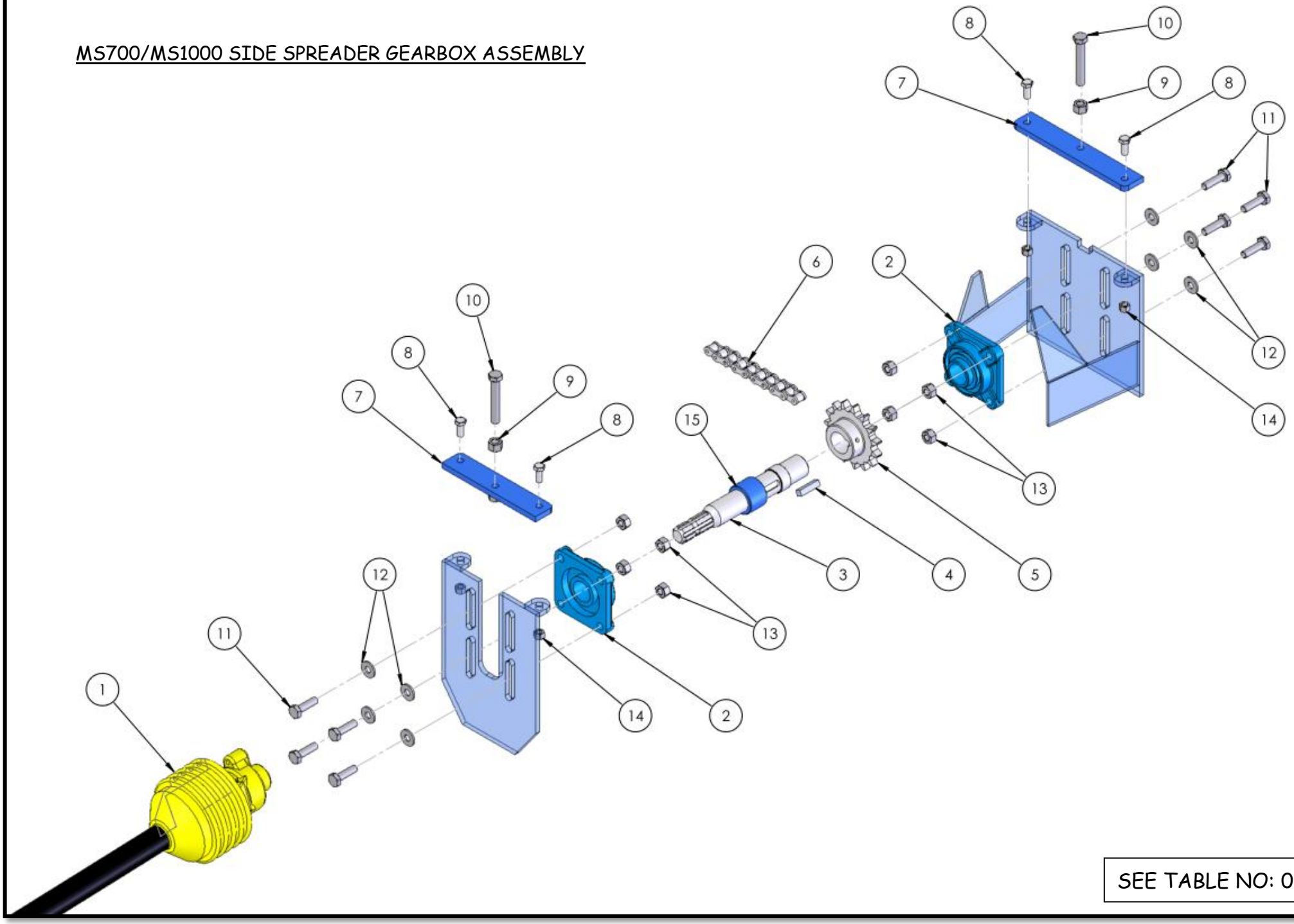

SEE TABLE NO: 015

TABLE NO: 015 M700/MS1000 SIDE SPREADER GEARBOX ASSEMBLY					
		MS700		MS1000	
ITEM NO	DESCRIPTION	CODE	QTY	CODE	QTY
1	PTO SHAFT	ZGPP121	1	ZGPP121	1
2	BEARING	ZGPP48	2	ZGPP48	2
3	INPUT SHAFT	ZMAC21	1	ZMAC21	1
4	KEYWAY	P001.333	1	P001.333	1
5	INPUT SHAFT COG	ZDRI02	1	ZDRI04A	1
6	DRIVE CHAIN	ZDRI20	1	ZDRI21	1
7	TENSIONER PLATE	P001.334	2	P001.334	2
8	M12X40 SET SCREW ZP	ZFAS51	4	ZFAS51	4
9	M12 PLAIN NUT ZP	ZFAS52	2	ZFAS52	2
10	M12X100 SET SCREW ZP	ZFAS43	2	ZFAS43	2
11	M14X50 BOLT ZP	ZFAS41	8	ZFAS41	8
12	M14 WASHER ZP	ZFAS88	8	ZFAS88	8
13	M14 NYLOCK NUT	ZFAS42	8	ZFAS42	8
14	M12 NYLOCK	ZFAS22	4	ZFAS22	4
15	SPACER	P001.352	1	P001.353	1

MS700/MS1000 SIDE SPREADER BRAKE ASSEMBLY

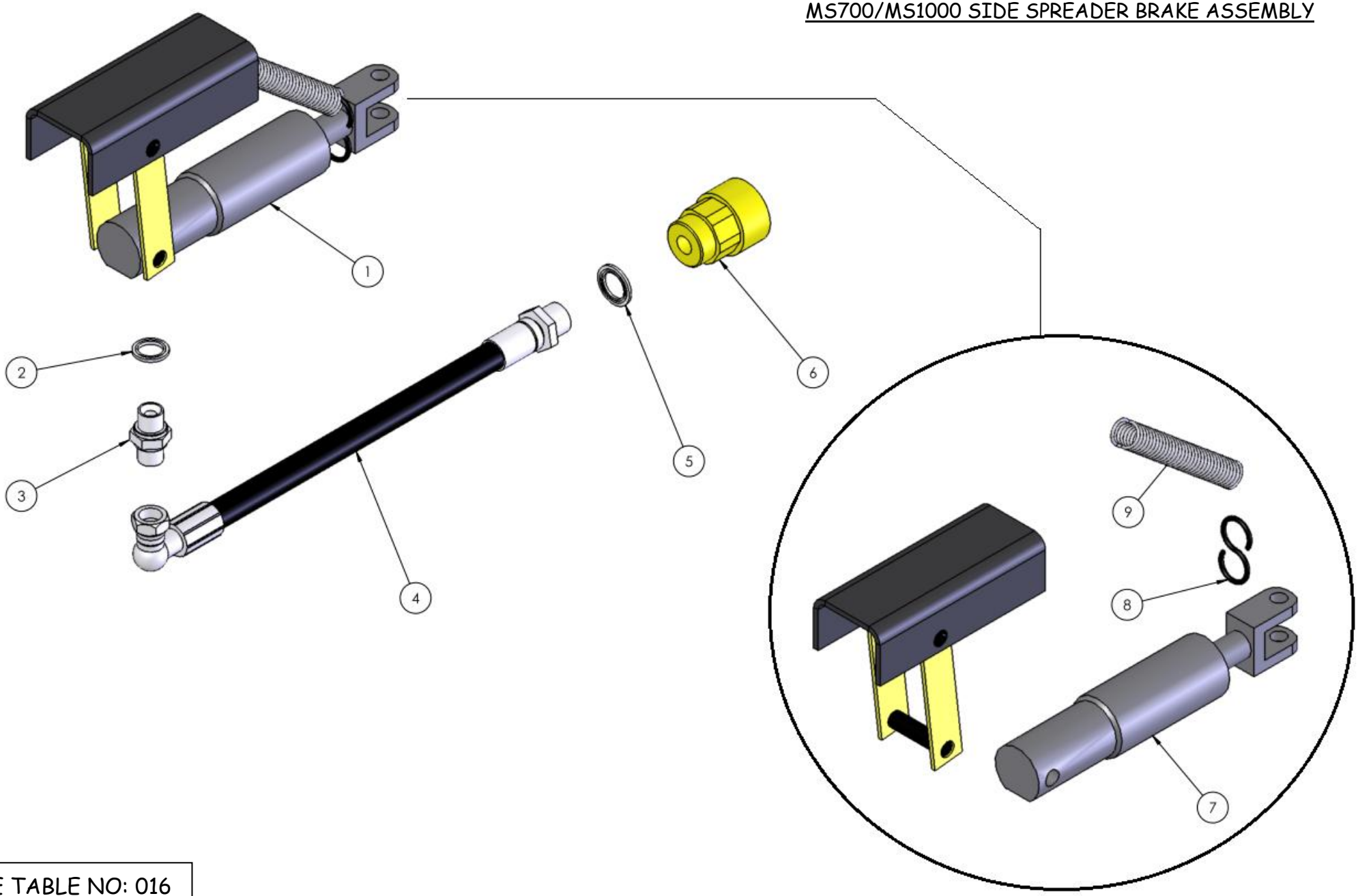

SEE TABLE NO: 016

TABLE NO: 016 M700/MS1000 SIDE SPREADER BRAKE ASSEMBLY					
		MS700		MS1000	
ITEM NO	DESCRIPTION	CODE	QTY	CODE	QTY
1	COMPLETE BRAKE ASSEMBLY	ZGPP124	1	ZGPP124	1
2	3/8” DOWDY SEAL	ZHYD05	1	ZHYD05	1
3	3/8” x 3/8” MALE CONNECTOR	ZHYD03	1	ZHYD03	1
4	HYDRAULIC HOSE (Includes Brake fitting)	ZHYD28	1	ZHYD30	1
5	DOWDY SEAL	ZHYD22	1	ZHYD22	1
6	BRAKE COUPLING	ZHYD25	1	ZHYD25	1
7	REPLACEMENT BRAKE CYLINDER	ZGPP73	1	ZGPP73	1
8	S CLIP	P001.354	1	P001.354	1
9	RETURN SPRING	ZSPR11	1	ZSPR11	1

MS700/MS1000 SIDE SPREADER LID HYDRAULIC RAM ASSEMBLY

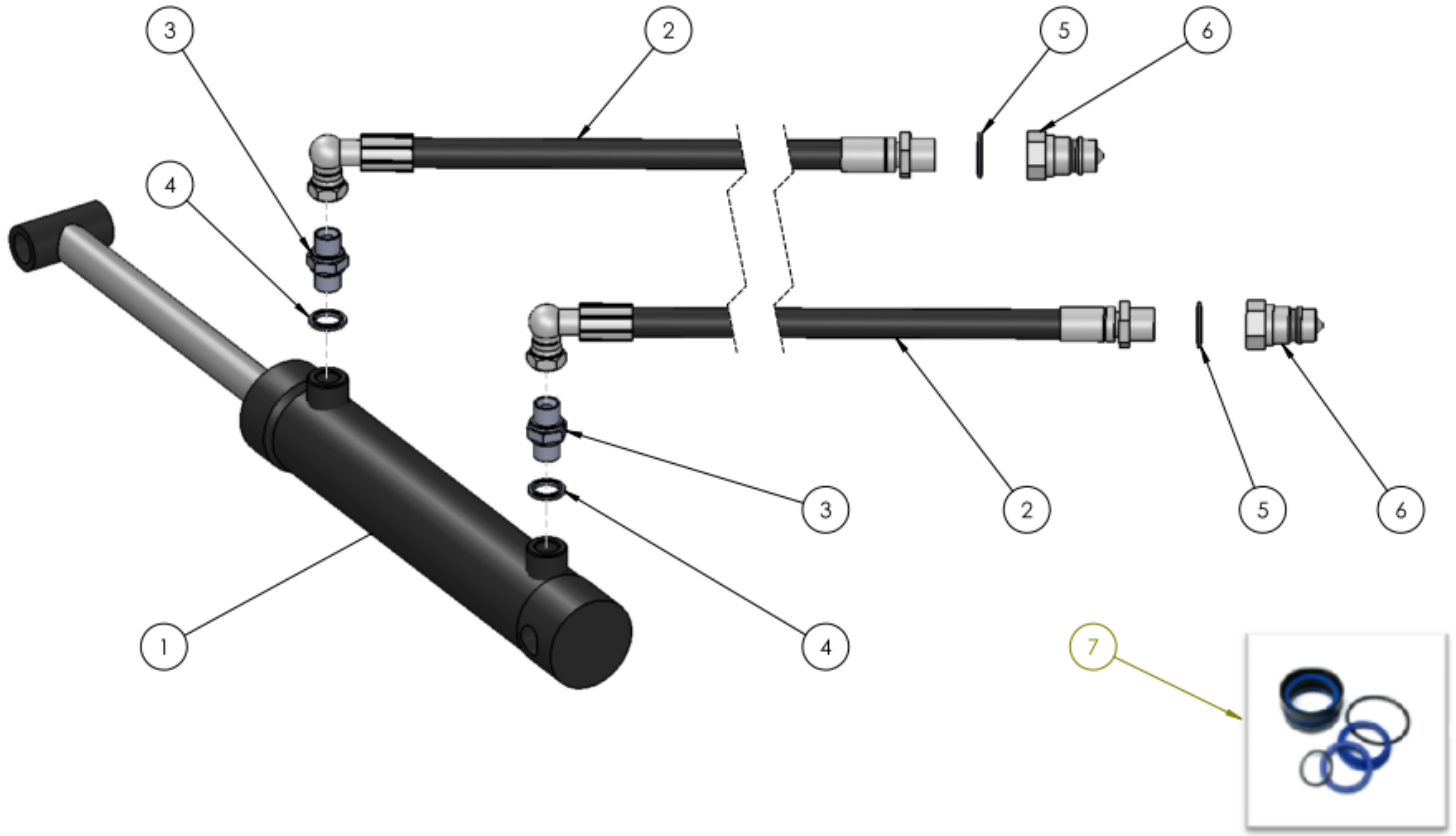

SEE TABLE NO: 017

TABLE NO: 017 M700/MS1000 SIDE SPREADER HYDRAULIC RAM ASSEMBLY					
		MS700		MS1000	
ITEM NO	DESCRIPTION	CODE	QTY	CODE	QTY
1	HYDRAULIC CYLINDER	ZHYD17	1		
1	HYDRAULIC CYLINDER MS1000 **(2005-2012)**			ZHYD17	1
2	HYDRAULIC HOSE	ZHYD18	2	ZHYD11	2
3	3/8" x 3/8" MALE CONNECTOR	ZHYD03	2	ZHYD03	2
4	3/8" DOWDY SEAL	ZHYD05	2	ZHYD05	2
5	DOWDY SEAL	ZHYD22	2	ZHYD22	2
6	½" MALE PROBE	ZHYD26	2	ZHYD26	2
7	HYDRAULIC RAM SEAL KIT	P001.355	1	P001.355	1

MS1000 SIDE SPREADER HYDRAULIC RAM ASSEMBLY 2012 onwards

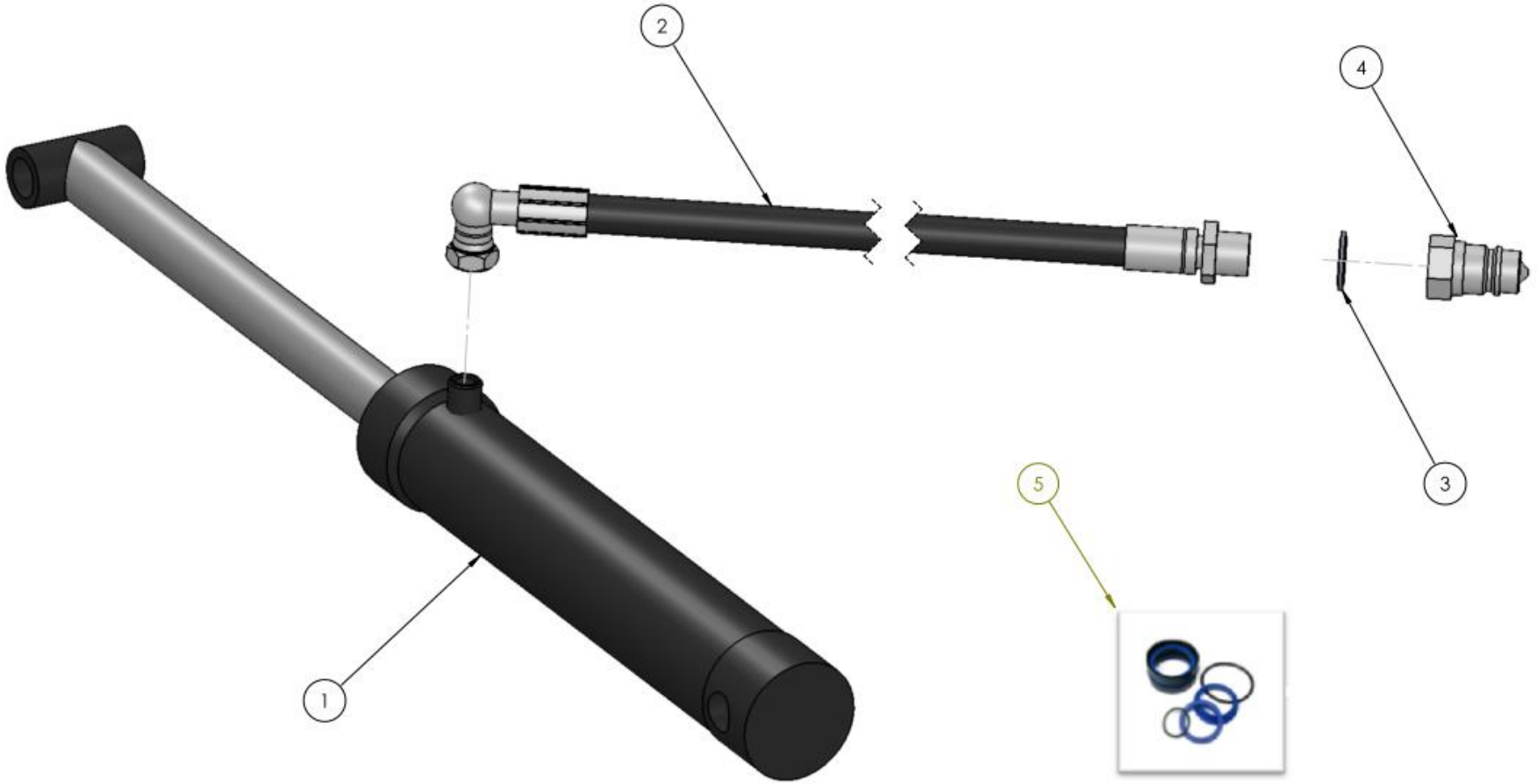

SEE TABLE NO: 018

TABLE NO: 018 MS1000 HYDRAULIC RAM ASSEMBLY (2012 onwards)			
		MS1000	
ITEM NO	DESCRIPTION	CODE	QTY
1	SINGLE ACTING HYDRAULIC RAM	ZHYD17A	1
2	HYDRAULIC HOSE	ZHYD11	1
3	DOWDY SEAL	ZHYD22	1
4	½" MALE PROBE	ZHYD26	1
5	HYDRAULIC RAM SEAL KIT	P001.356	1

MS700 TVZ AXLE Part No: ZGPP120

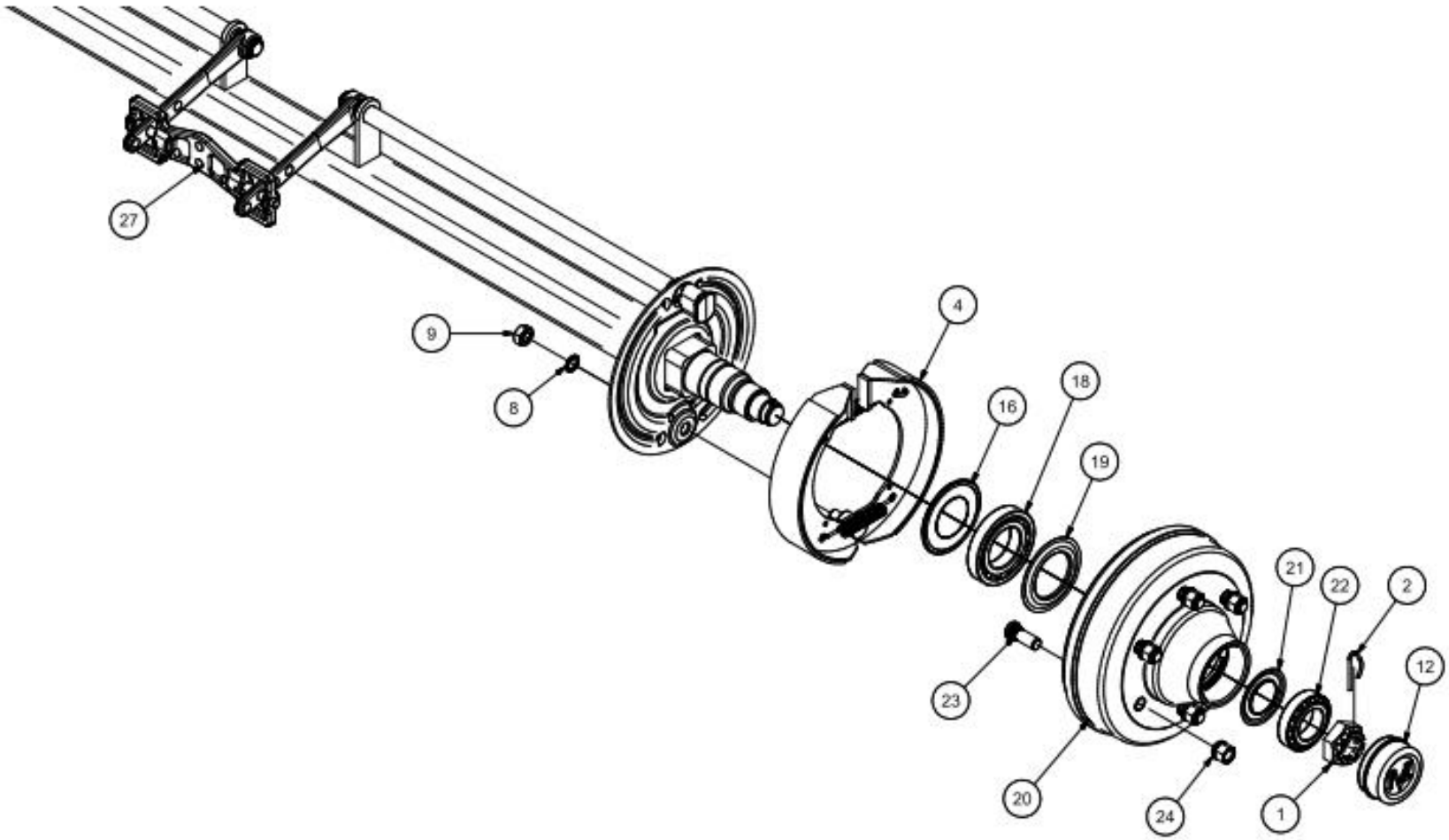

SEE TABLE NO: 019

TABLE NO: 019 MS700 TVZ AXLE Part No: ZGPP120			
		MS700	
ITEM NO	DESCRIPTION	CODE	QTY
1	CROWN NUT M39X1.50	57539B2	2
2	SPRING PIN FOR NUT	58205	2
4	BRAKE SHOE 300X60	9FCA300ZO	2
8	SPRING WASHER D16	915RE16	2
9	NUT M16X2.00	97116D1	2
12	DUST CAP 90mm	56109009	2
16	SEAL	5411201	2
18	BEARING	59130213	2
19	DUST SHIELD	5511201	2
20	DRUM	65L6NA01	2
21	DUST SHIELD	5510901	2
22	BEARING	59132210	2
23	AXLE STUD 18mmx1.5mm	AX-18501.5	12
24	AXLE NUT 18mmx1.5mm	AX-181.5	12
27	COMPENSATOR	768102	1

MS1000 TVZ AXLE Part No: ZGPP17 (New Version)

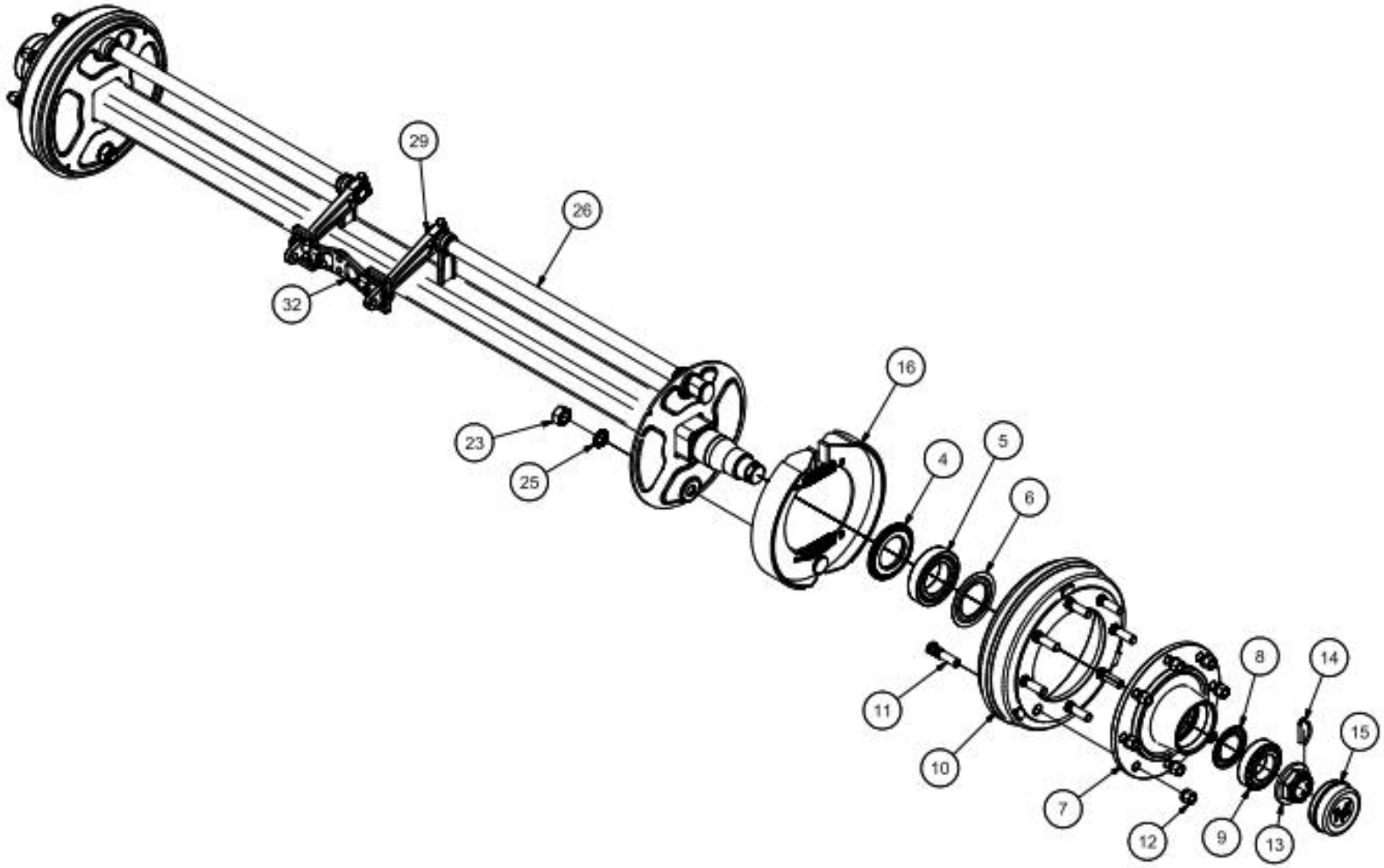

SEE TABLE NO: 020

TABLE NO: 020 MS1000 TVZ AXLE Part No: ZGPP17 (New Version)			
		MS1000	
ITEM NO	DESCRIPTION	CODE	QTY
4	INDUSTRIAL SEAL	5441301	2
5	BEARING	59132215	2
6	DUST SHIELD	5511301	2
7	HUB	61L08110130150	2
8	DUST SHIELD	5530991	2
9	BEARING	59132212	2
10	DRUM	66LNF0803	2
11	AXLE STUD 18mmx1.5mm	AX-18501.5	16
12	AXLE NUT 18mmx1.5mm	AX-181.5	16
13	CROWN NUT M48x1.5	57548B5	2
14	SPRING PIN FOR NUT	58209	2
15	DUST CAP 110mm	56111009	2
16	BRAKE SHOE 350X060	9FCA350ZO	2
23	NUT M24X1.5	97124B1	2
25	TWIN WASHER	9800241	2
26	CAM SHAFT	753032C800	2
29	BRAKE LEVER	7613201	2
32	COMPENSATOR	768102	1

MS1000 TVZ AXLE Part No: ZGPP17 (Old Version)

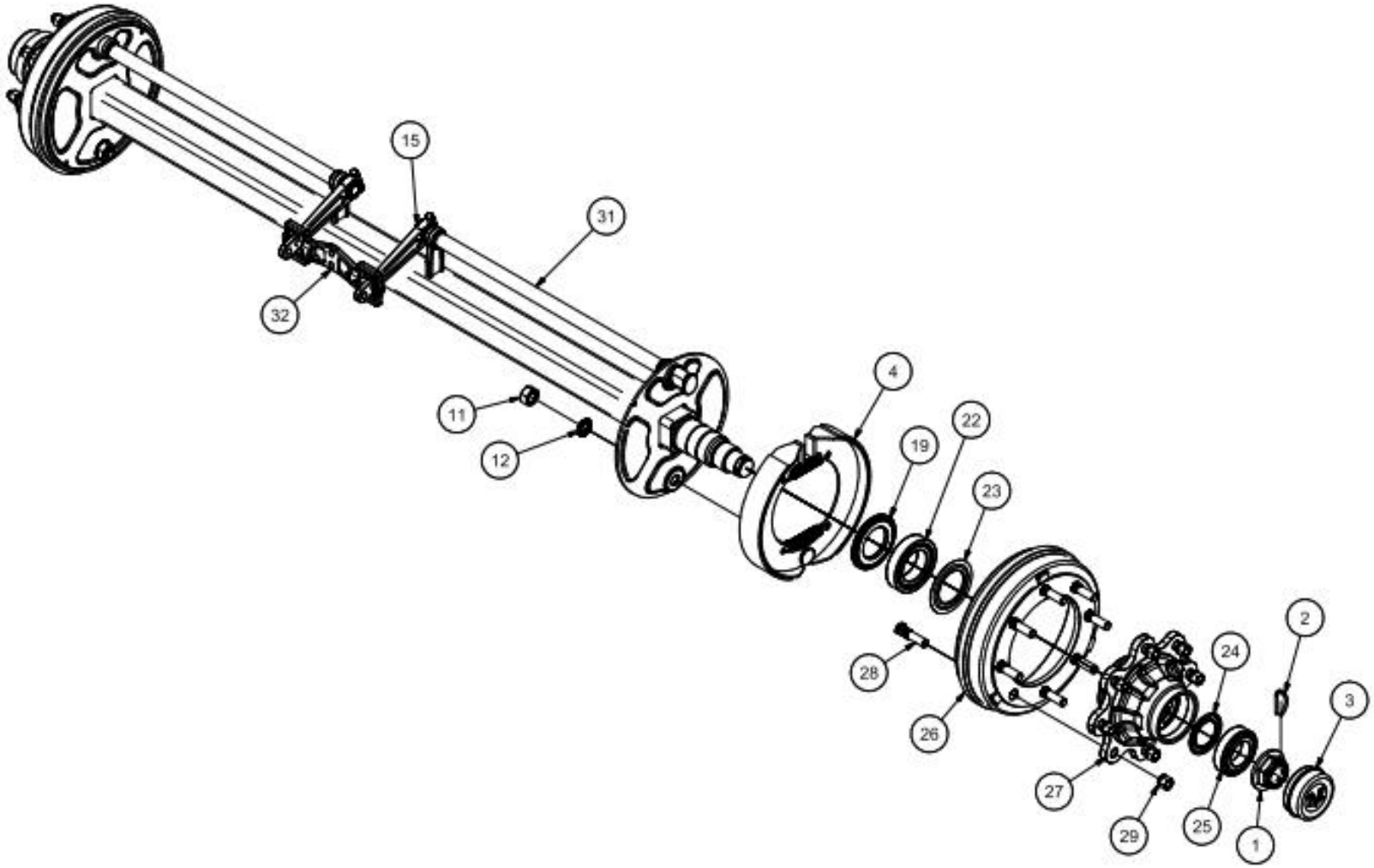

SEE TABLE NO: 021

TABLE NO: 021 MS1000 TVZ AXLE Part No: ZGPP17 (Old Version)			
		MS1000	
ITEM NO	DESCRIPTION	CODE	QTY
1	CROWN NUT M48x1.5	57548B5	2
2	SPRING PIN FOR NUT	58209	2
3	DUST CAP 110mm	56111009	2
4	BRAKE SHOE 350X060	9FCA350ZO	2
11	NUT M24X1.5	97124B1	2
12	TWIN WASHER	9800241	2
15	BRAKE LEVER	7613201	2
19	INDUSTRIAL SEAL	5441301	2
22	BEARING	59132215	2
23	DUST SHIELD	5511301	2
24	DUST SHIELD	5530991	2
25	BEARING	59132212	2
26	DRUM	66LNF0803	2
27	HUB	61L08110130250	2
28	AXLE STUD 18mmx1.5mm	AX-18501.5	16
29	AXLE NUT 18mmx1.5mm	AX-181.5	16
31	CAM SHAFT	753032C800	2
32	COMPENSATOR	768102	1

MS700/1000 SIDE SPREADER PTO SHAFT ZGPP121

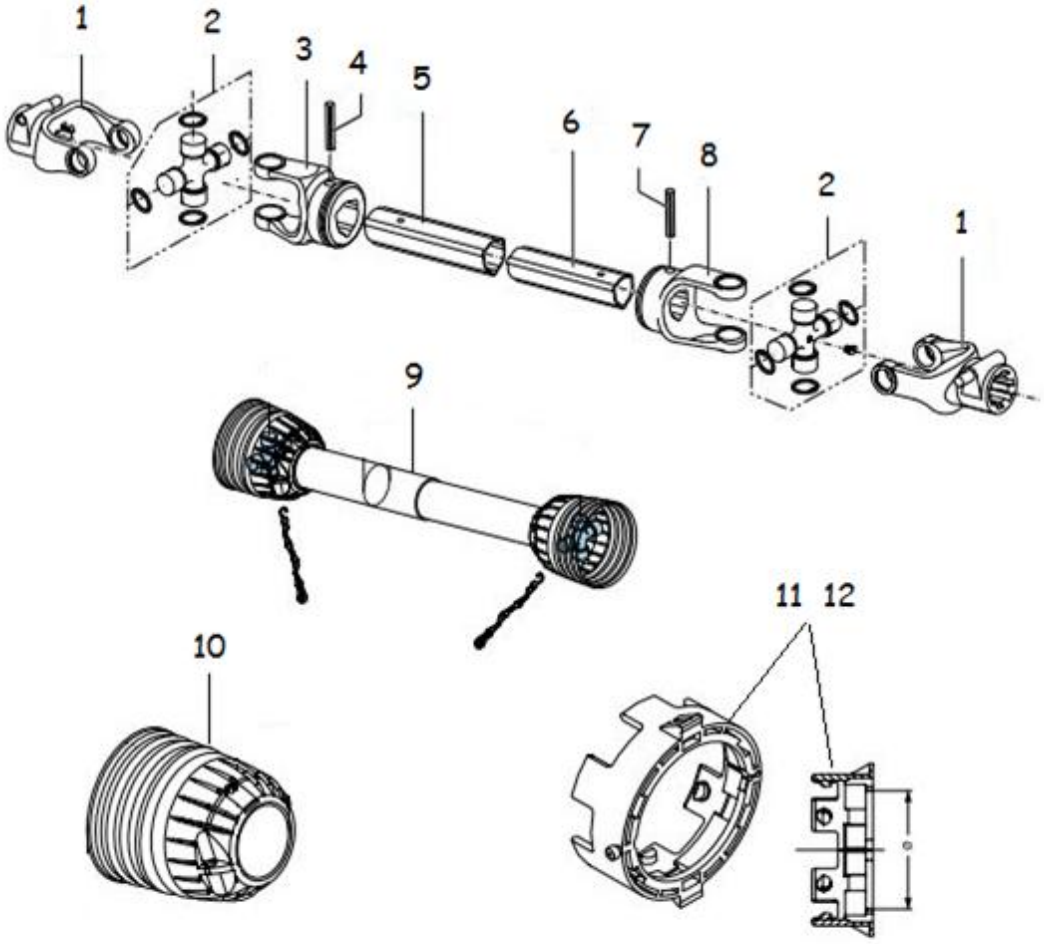

comer industries

SEE TABLE NO: 022

TABLE NO: 022 MS700/1000 SIDE SPREADER PTO SHAFT			
ZGPP121			
POS.	**PART NO.**	**PCS.**	**DESCRIPTION:**
1	P68C-141-026-544	2	1 3/8” x 6 SPLINED YOKE
2	P8C-180-016-130	2	CROSS & BEARING KIT
3	P8C-151-016-028	1	OUTER PROFILE YOKE
4	P8C-190-000-018	1	M10 x 80mm ROLL PIN
5	P8C-152-160-461-0700	1	OUTER PROFILE TUBE 965mm
6	P8C-153-150-334	1	INNER PROFILE TUBE 980mm
7	P8C190-000-016	1	M10 x 70mm ROLL PIN
8	P8C-151-016-029	1	INNER PROFILE YOKE
9	P8C-142-360-016-9650	1	SAFETY COVER
10	P8C-180-036-633	1	SAFETY COVER CONE
11	P9C-180016596	1	(a=69mm) COVER BEARING
12	P9C-180016595	1	(a=60mm) COVER BEARING

MS700/1000 SIDE SPREADER PTO SHAFT ZGPP121

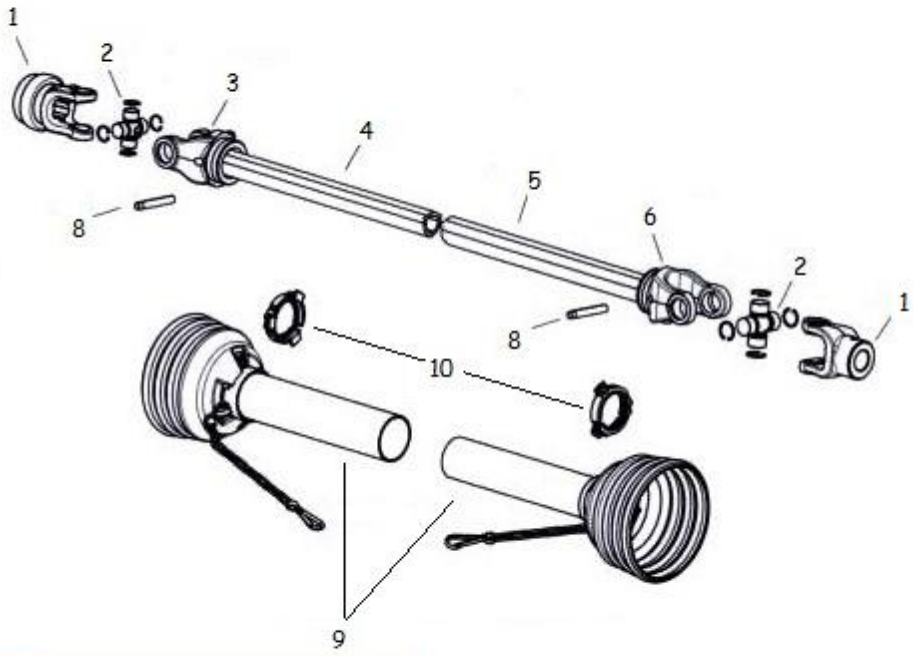

Weasler®

SEE TABLE NO: 023

TABLE NO: 023 MS700/1000 SIDE SPREADER PTO SHAFT			
ZGPP103			
POS.	**PART NO.**	**PCS.**	**DESCRIPTION:**
1	P9T-102-6706	2	1 3/8” x 6 SPLINED YOKE
2	P9T-200-6794	2	CROSS & BEARING KIT
3	P9T-300-6745	1	INNER PROFILE YOKE
4	P9T-610-4504-000	1	INNER PROFILE TUBE 3m
5	P9T-610-5404-000	1	OUTER PROFILE TUBE 3m
6	P9T-300-6754	1	OUTER PROFILE YOKE
8	P9T-508-1085	1	M10 x 85mm ROLL PIN
9	P9T-907-3500-151	1	SAFETY COVER
10	P9T-961-3567	1	SAFETY COVER BEARING KIT