FLEMING

MACHINERY FOR AGRICULTURE
AND COUNTRYSIDE CARE

SHEARGRAB SPARE PARTS LIST

SG4,SG5 & SG6 SHEARGRAB ASSEMBLY (OPEN)

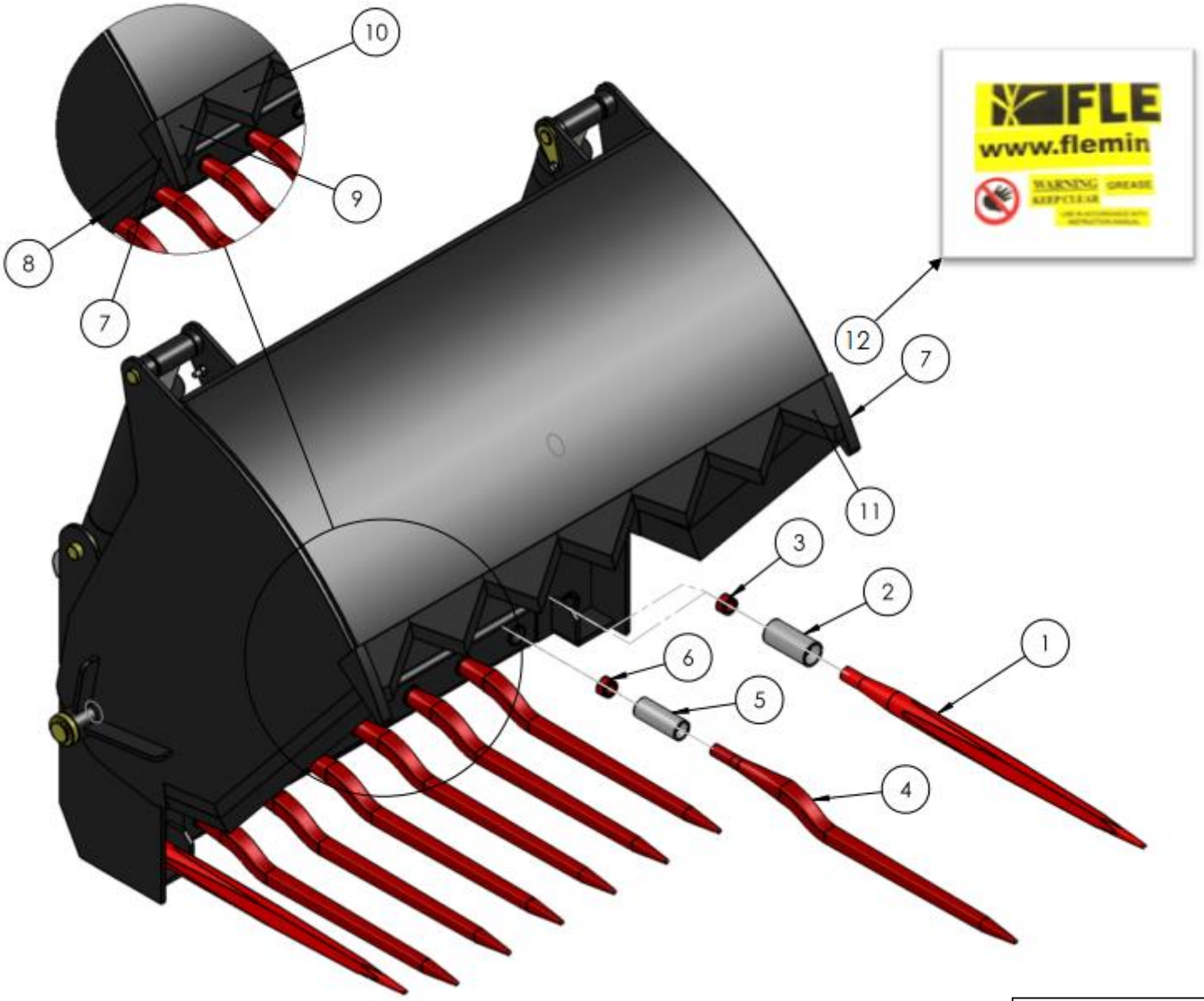

SEE TABLE NO: 001

TABLE NO: 001 SG4,SG5 & SG6 SHEARBGRAB ASSEMBLY (OPEN)							
ITEM NO	DESCRIPTION	SG4		SG5		SG6	
		CODE	QTY	CODE	QTY	CODE	QTY
1	STRAIGHT TINE 810mm LONG M28	ZGPP193	2	ZGPP193	2	ZGPP193	4
2	HEAVY DUTY TINE BUSHION	ZGPP27	2	ZGPP27	2	ZGPP27	4
3	REPLACEMENT NUT FOR M28 TINE	ZFAS136	2	ZFAS136	2	ZFAS136	4
4	CRANKED TINE 815mm LONG M22	ZGPP192	7	ZGPP192	9	ZGPP192	8
5	CAT 1 TINE BUSHION	ZGPP191	7	ZGPP191	9	ZGPP191	8
6	REPLACEMENT TINE M22 NUT	ZFAS135	7	ZFAS135	9	ZFAS135	8
7	BLADE PROTECTOR	ZPPA445	2	ZPPA445	2	ZPPA445	2
8	SIDE BLADE 780x60x10	ZGPP194	2	ZGPP194	2	ZGPP194	2
9	LHD BLADE 150x125x7	ZGPP197	1	ZGPP197	1	ZGPP197	1
10	CENTRE BLADE 200x125x7	ZGPP195	5	ZGPP195	6	ZGPP195	7
11	RHD BLADE 150x125x7	ZGPP196	1	ZGPP196	1	ZGPP196	1
12	SHEARGRAB STICKER KIT	P001.517	1	P001.517	1	P001.517	1

SG4,SG5 & SG6 SHEARGRAB ASSEMBLY (CLOSED)

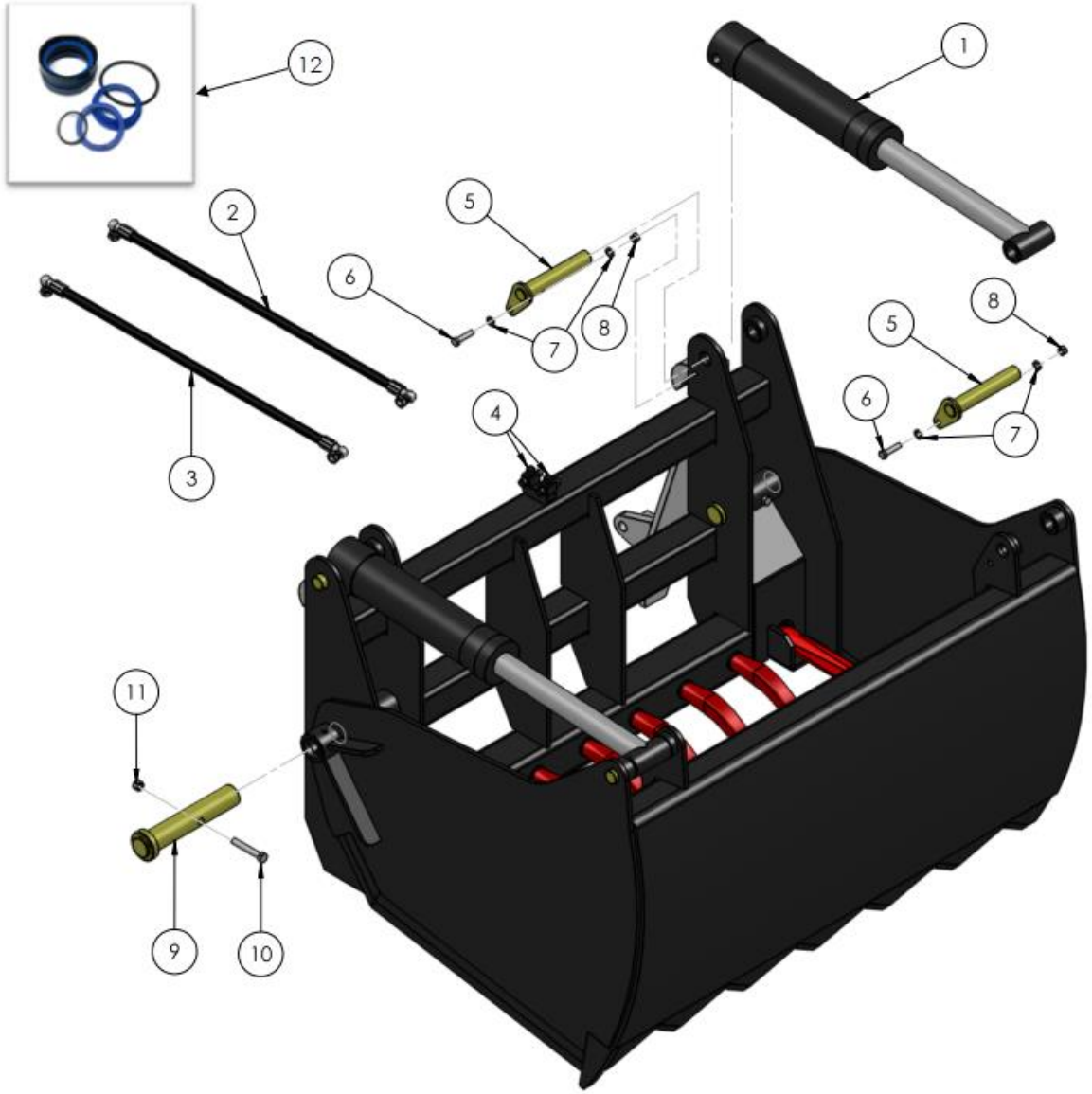

SEE TABLE NO: 002

TABLE NO: 002 SG4,SG5 & SG6 SHEARBGRAB ASSEMBLY (CLOSED)							
ITEM NO	DESCRIPTION	SG4		SG5		SG6	
		CODE	QTY	CODE	QTY	CODE	QTY
1	SHEARGRAB HYDRAULIC RAM	ZHYD42	2	ZHYD42	2	ZHYD42	2
2	3/8” HYDRAULIC HOSE 900mm LONG	ZHYD44	2				
2	3/8” HYDRAULIC HOSE 1000mm LONG			ZHYD46	2		
2	3/8” HYDRAULIC HOSE 900mm LONG					ZHYD44	2
3	3/8” HYDRAULIC HOSE 650mm LONG	ZHYD43	2				
3	3/8” HYDRAULIC HOSE 770mm LONG			ZHYD45	2		
3	3/8” HYDRAULIC HOSE 1300mm LONG					ZHYD63	2
4	3/8”M T CONNECTOR	ZHYD52	2	ZHYD52	2	ZHYD52	2
5	SHEARGRAB RAM PIN	ZMAC65	4	ZMAC65	4	ZMAC65	4
6	M10x45 BOLT	ZFAS104	4	ZFAS104	4	ZFAS104	4
7	M10 WASHER ZP	ZFAS03	8	ZFAS03	8	ZFAS03	8
8	M10 NYLOCK NUT	ZFAS20	4	ZFAS20	4	ZFAS20	4
9	SHEARGRAB MAIN PIVOT PIN	P001.293	2	P001.293	2	P001.293	2
10	M12x80 BOLT ZP	ZFAS47	2	ZFAS47	2	ZFAS47	2
11	M12 NYLOCK NUT	ZFAS22	2	ZFAS22	2	ZFAS22	2
12	SHEARGRAB SEAL KIT	HYDSKSG	1	HYDSKSG	1	HYDSKSG	1

SG6 & SG66 THREE RAM VERSION SHEARGRAB ASSEMBLY (OPEN)

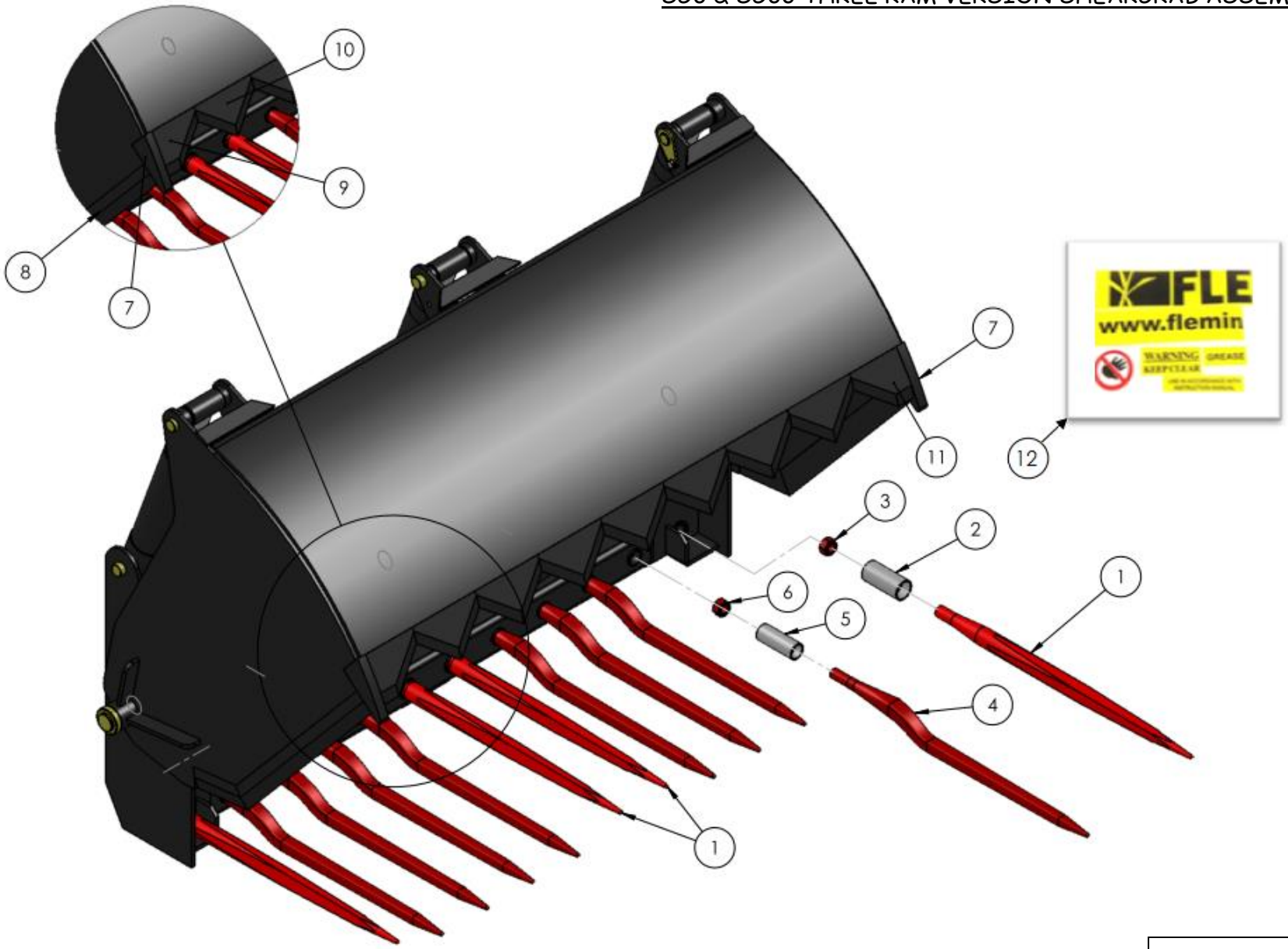

SEE TABLE NO: 003

TABLE NO: 003 SG6 & SG66 THREE RAM VERSION SHEARBGRAB ASSEMBLY (OPEN)					
ITEM NO	DESCRIPTION	SG6		SG66	
		CODE	QTY	CODE	QTY
1	STRAIGHT TINE 810mm LONG M28	ZGPP193	4	ZGPP193	4
2	HEAVY DUTY TINE BUSHION	ZGPP27	4	ZGPP27	4
3	REPLACEMENT TINE M28 NUT	ZFAS136	4	ZFAS136	4
4	CRANKED TINE 815mm LONG M22	ZGPP192	8	ZGPP192	10
5	CAT 1 TINE BUSHION	ZGPP191	8	ZGPP191	10
6	REPLACEMENT TINE M22 NUT	ZFAS135	8	ZFAS135	10
7	BLADE PROTECTOR	ZPPA445	2	ZPPA445	2
8	SIDE BLADE 780x60x10	ZGPP194	3	ZGPP194	3
9	LHD BLADE 150x125x7	ZGPP197	1	ZGPP197	1
10	CENTRE BLADE 200x125x7	ZGPP195	7	ZGPP195	8
11	RHD BLADE 150x125x7	ZGPP196	1	ZGPP196	1
12	SHEARGRAB STICKER KIT	P001.518	1	P001.518	1

SG6 & SG66 THREE RAM VERSION SHEARGRAB ASSEMBLY (CLOSED)

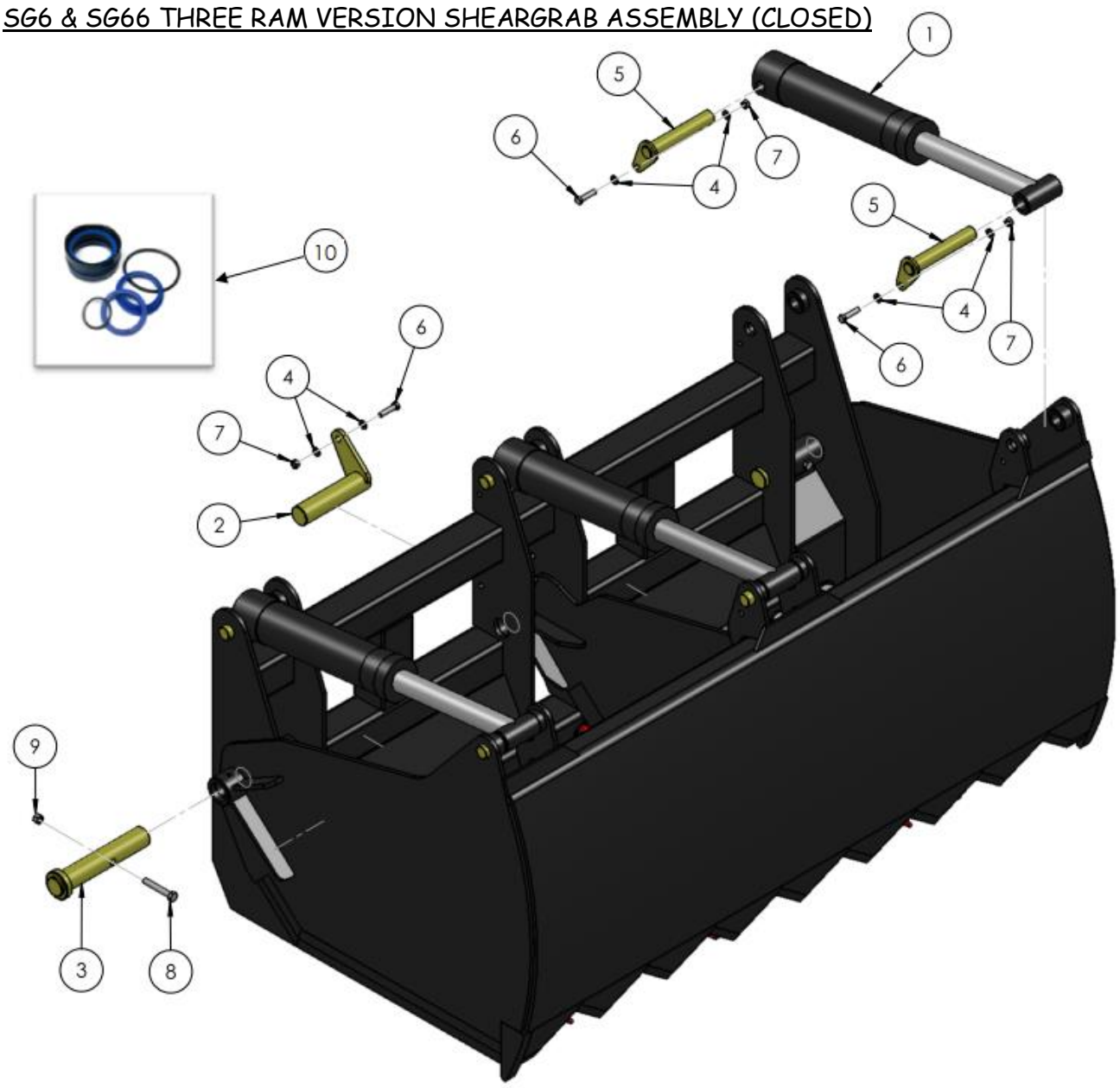

SEE TABLE NO: 004

TABLE NO: 004 SG4 & SG5 THREE RAM VERSION SHEARBGRAB ASSEMBLY (CLOSED)					
ITEM NO	DESCRIPTION	SG6		SG66	
		CODE	QTY	CODE	QTY
1	SHEARGRAB HYDRAULIC RAM	ZHYD42	3	ZHYD42	3
2	CENTRE PIVOT PIN	P001.294	1	P001.294	1
3	SHEARGRAB MAIN PIVOT PIN	P001.293	2	P001.293	2
4	M10 WASHER ZP	ZFAS03	14	ZFAS03	14
5	SHEARGRAB RAM PIN	ZMAC65	6	ZMAC65	6
6	M10x45 BOLT	ZFAS104	7	ZFAS104	7
7	M10 NYLOCK NUT	ZFAS20	7	ZFAS20	7
8	M12x80 BOLT ZP	ZFAS47	2	ZFAS47	2
9	M12 NYLOCK NUT	ZFAS22	2	ZFAS22	2
10	SHEARGRAB SEAL KIT	HYDSKSG	1	HYDSKSG	1

SG6 & SG66 THREE RAM VERSION SHEARGRAB HYDRAULIC HOSE ASSEMBLIES

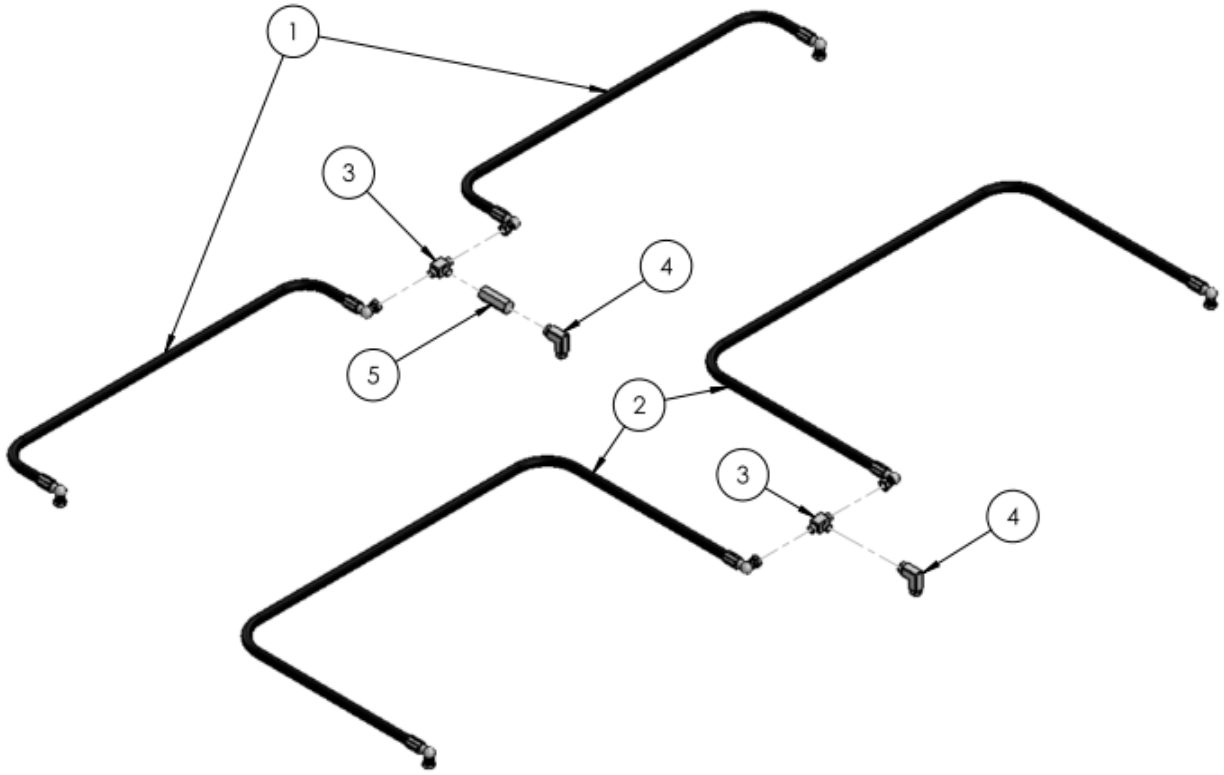

SEE TABLE NO: 005

TABLE NO: 005 SG4 & SG5 THREE RAM VERSION SHEARBGRAB HYDRAULIC HOSE ASSEMBLIES					
ITEM NO	DESCRIPTION	SG6		SG66	
		CODE	QTY	CODE	QTY
1	3/8” HYDRAULIC HOSE 770mm LONG	ZHYD45	2		
1	3/8” HYDRAULIC HOSE 900mm LONG			ZHYD44	2
2	3/8” HYDRAULIC HOSE 1450mm LONG	ZHYD53	2	ZHYD53	2
3	3/8” BSP MALE CROSS HYDRAULIC FITTING	ZHYD48	2	ZHYD48	2
4	3/8” BSP 90 DEGREE FM FM HYDRAULIC FITTING	ZHYD06	2	ZHYD06	2
5	3/8” RESTRICTED FLOW ADAPTOR	ZHYD49	1	ZHYD49	1