FLEMING

MACHINERY FOR AGRICULTURE
AND COUNTRYSIDE CARE

TR1 & TR2 SPARE PARTS LIST

TR1 & TR2 TRAILER CHASSIS

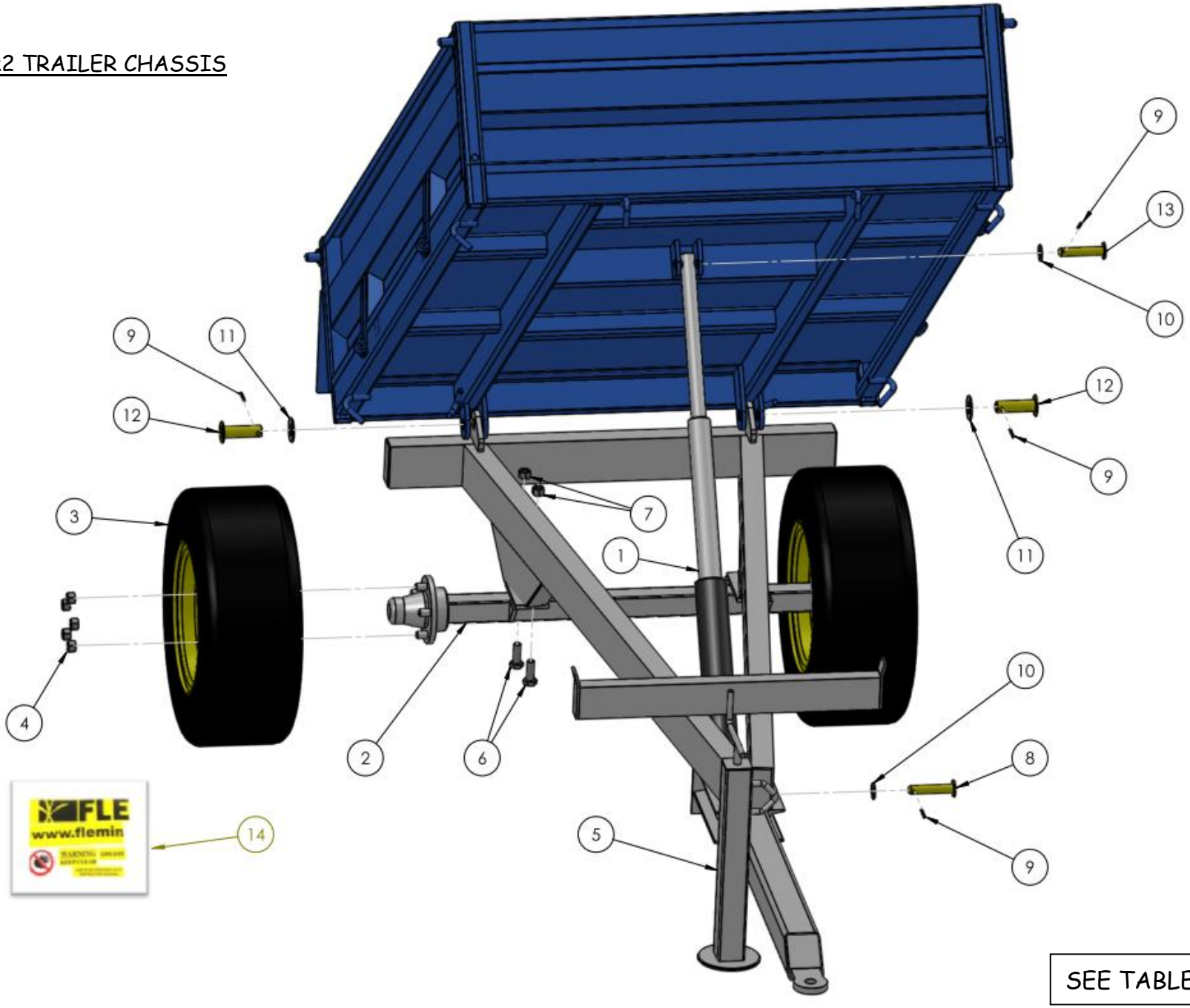

SEE TABLE NO: 001

TABLE NO: 001 TR1 & TR2 TRAILER CHASSIS ASSEMBLY					
ITEM NO	DESCRIPTION	TR1		TR2	
		CODE	QTY	CODE	QTY
1	2 STAGE HYDRAULIC CYLINDER	ZHYD39	1	ZHYD23	1
2	AXLE	ZGPP183	1	ZGPP159	1
3	WHEEL 23x10.5-12 5 stud	ZGPP182	2		
3	WHEEL (STANDARD SIZE) 10/80/12 5 stud			ZGPP160	2
3	WHEEL (OVERSIZE TURF TYRE 26/12/12 5 stud OPTIONAL)			ZGPP160A	2
4	WHEEL NUT	AX-161.5	10	AX-161.5	10
5	PARKING STAND	ZGPP131	1	ZGPP131	1
6	M16X45 SETSCREW ZP	ZFAS11	4	ZFAS11	4
7	M16 NYLOCK NUT	ZFAS23	4	ZFAS23	4
8	PIN	ZMAC79	1	ZMAC79	1
9	M6x40 ROLL PIN	ZFAS30	4	ZFAS30	4
10	M20 WASHER ZP	ZFAS39	2	ZFAS39	2
11	1” WASHER ZP	ZFAS49	2	ZFAS49	2
12	PIN	ZMAC80	2	ZMAC80	2
13	PIN	ZMAC74	1	ZMAC74	1
14	STICKER KIT COMPLETE	P001.544	1	P001.545	1

TR1 & TR2 TRAILER SIDES

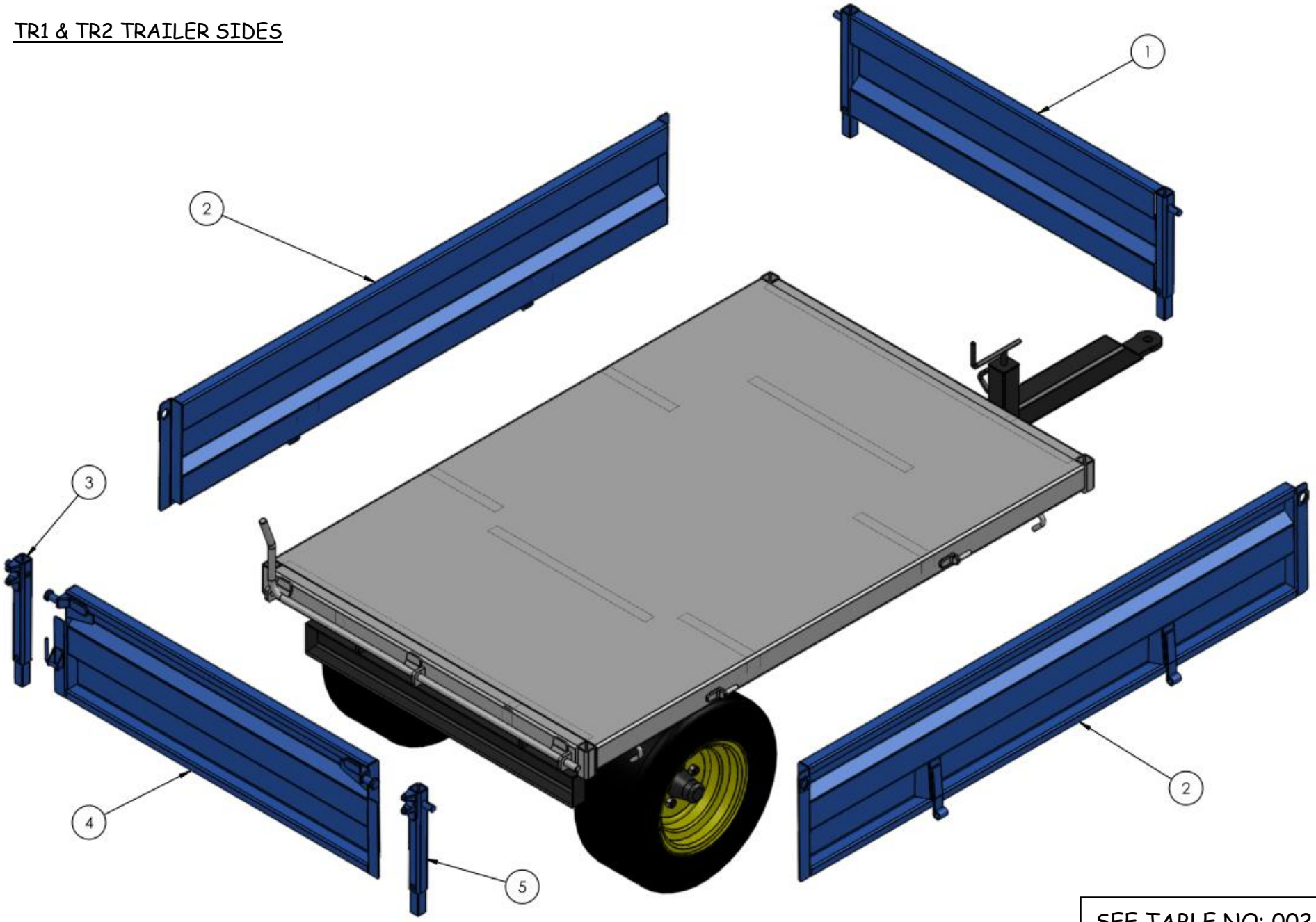

SEE TABLE NO: 002

TABLE NO: 002 TR1 & TR2 TRAILER SIDES					
ITEM NO	DESCRIPTION	TR1		TR2	
		CODE	QTY	CODE	QTY
1	TRAILER HEADBOARD	P001.360	1	P001.361	1
2	TRAILER SIDE	P001.362	2	P001.363	2
3	TRAILER REAR DOOR	P001.364	1	P001.365	1
4	TRAILER LEFT HAND POST	P001.366	1	P001.367	1
5	TRAILER RIGHT HAND POST	P001.368	1	P001.369	1

TR1 and TR2 MESH SIDES

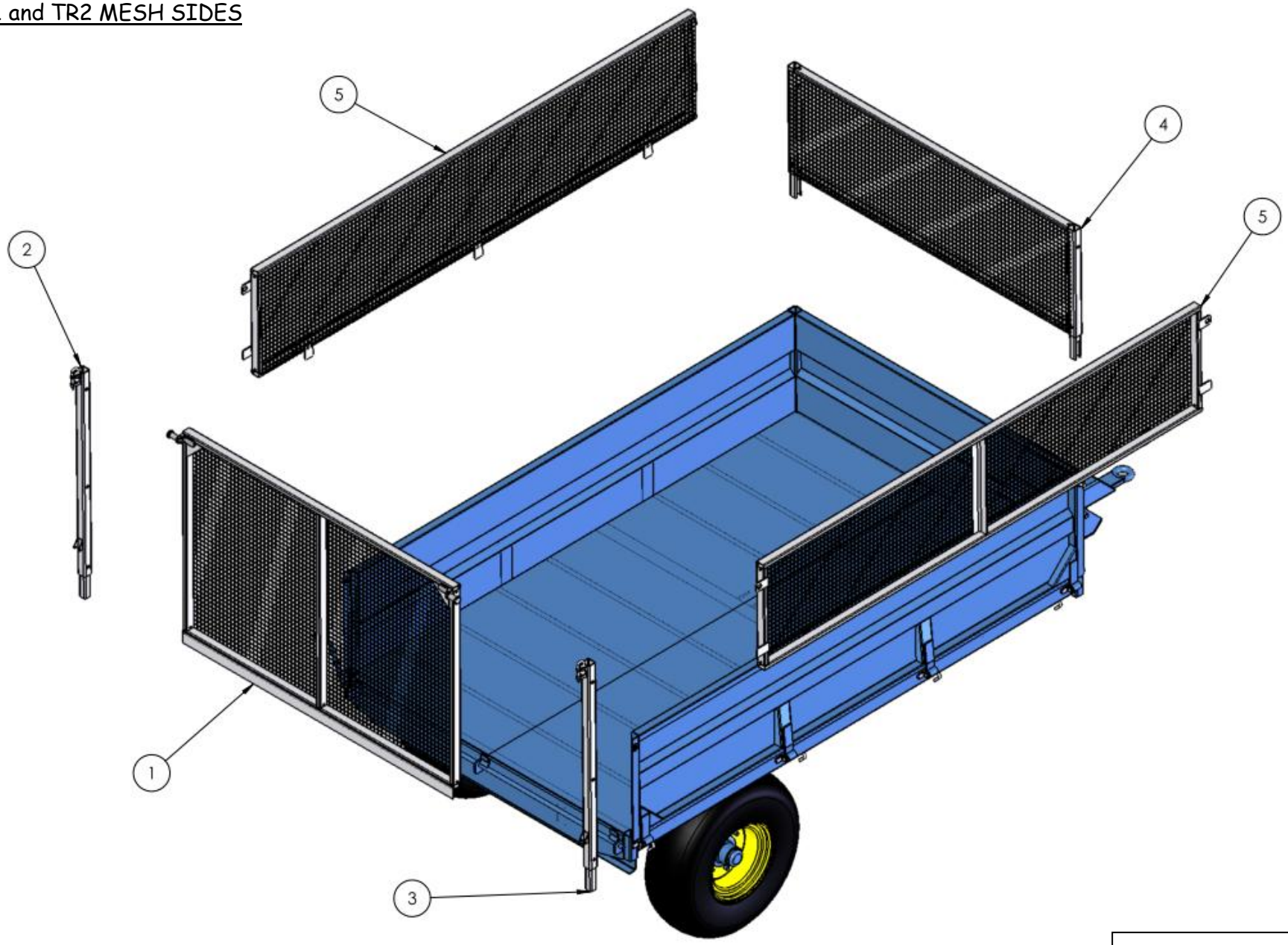

SEE TABLE NO: 003

TABLE NO: 003 TR1 & TR2 TRAILER MESH SIDES					
ITEM NO	DESCRIPTION	TR1		TR2	
		CODE	QTY	CODE	QTY
1	TRAILER REAR DOOR (MESH)	P001.370	1	P001.371	1
2	TRAILER LEFT HAND POST	P001.372	1	P001.373	1
3	TRAILER RIGHT HAND POST	P001.374	1	P001.375	1
4	TRAILER HEADBOARD (MESH)	P001.376	1	P001.377	1
5	TRAILER MESH SIDE	P001.378	2	P001.379	2

TR1 and TR2 BODY FITTINGS

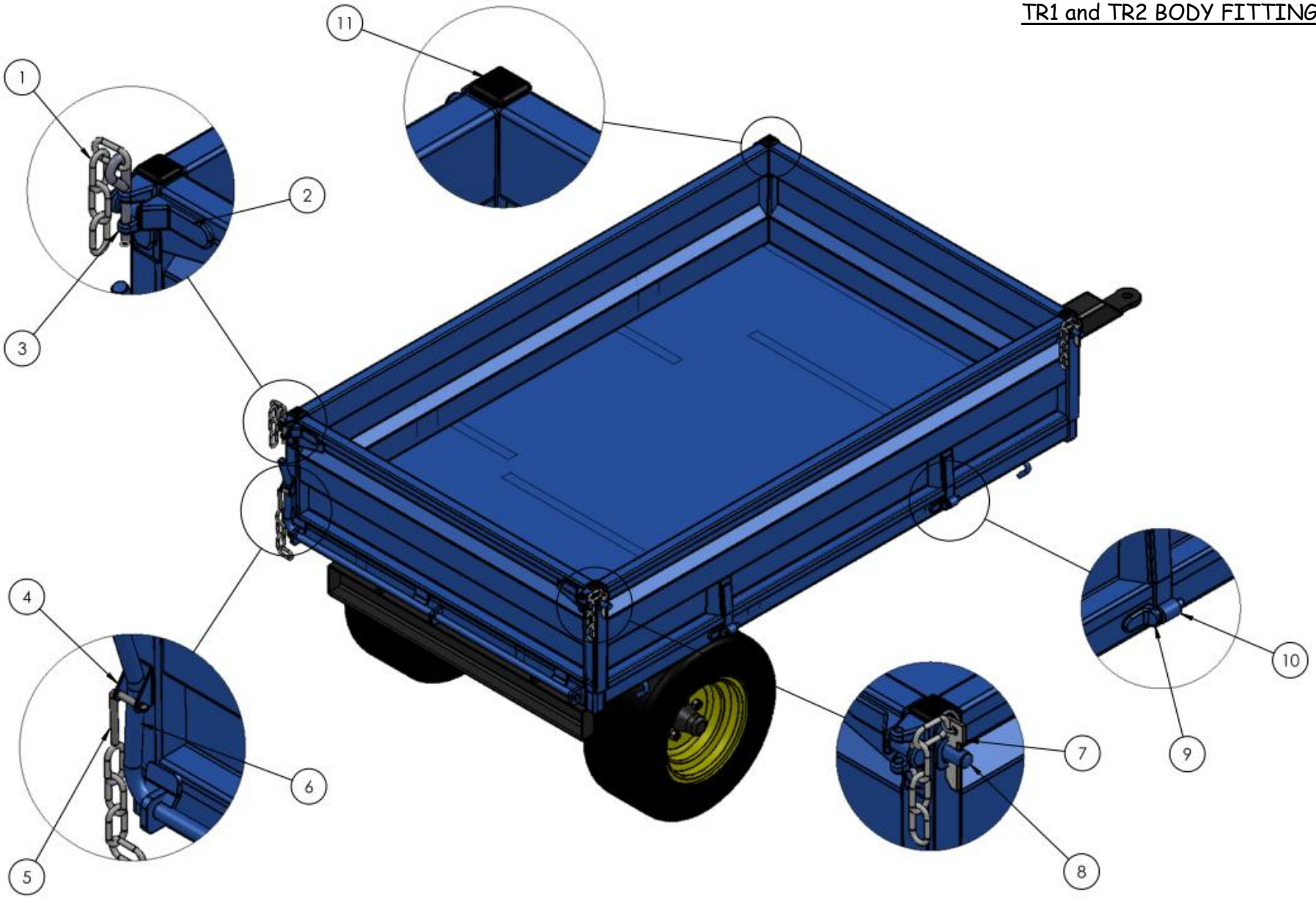

SEE TABLE NO: 004

TABLE NO: 004 TR1 & TR2 TRAILER BODY FITTINGS					
ITEM NO	DESCRIPTION	TR1		TR2	
		CODE	QTY	CODE	QTY
1	PIN & CHAIN	ZGPP156	2	ZGPP156	2
2	TRAILER HINGE LUG 3/4	ZGPP164	2	ZGPP164	2
3	TAILGATE FORKLET 3/4	ZGPP163	2	ZGPP163	2
4	CATCH BOX 3/4"	ZGPP154	2	ZGPP154	2
5	Catch Box Pin c/w Chain	ZGPP149	2	ZGPP149	2
6	TRIP MECHANISM ROD	P001.380	1	P001.381	1
7	PIN & CHAIN	ZGPP147	4	ZGPP147	4
8	SLOTTED PEG	ZGPP148	4	ZGPP148	4
9	MS20 1/2" GUDGEON PIN	ZGPP143	4	ZGPP143	4
10	MS20 1/2" GUDGEON HINGE	ZGPP144	4	ZGPP144	4
11	40X40X4 PLASTIC CAP	ZGPP01	4	ZGPP01	4

TR1 & TR2 TRAILER HYDRAULICS

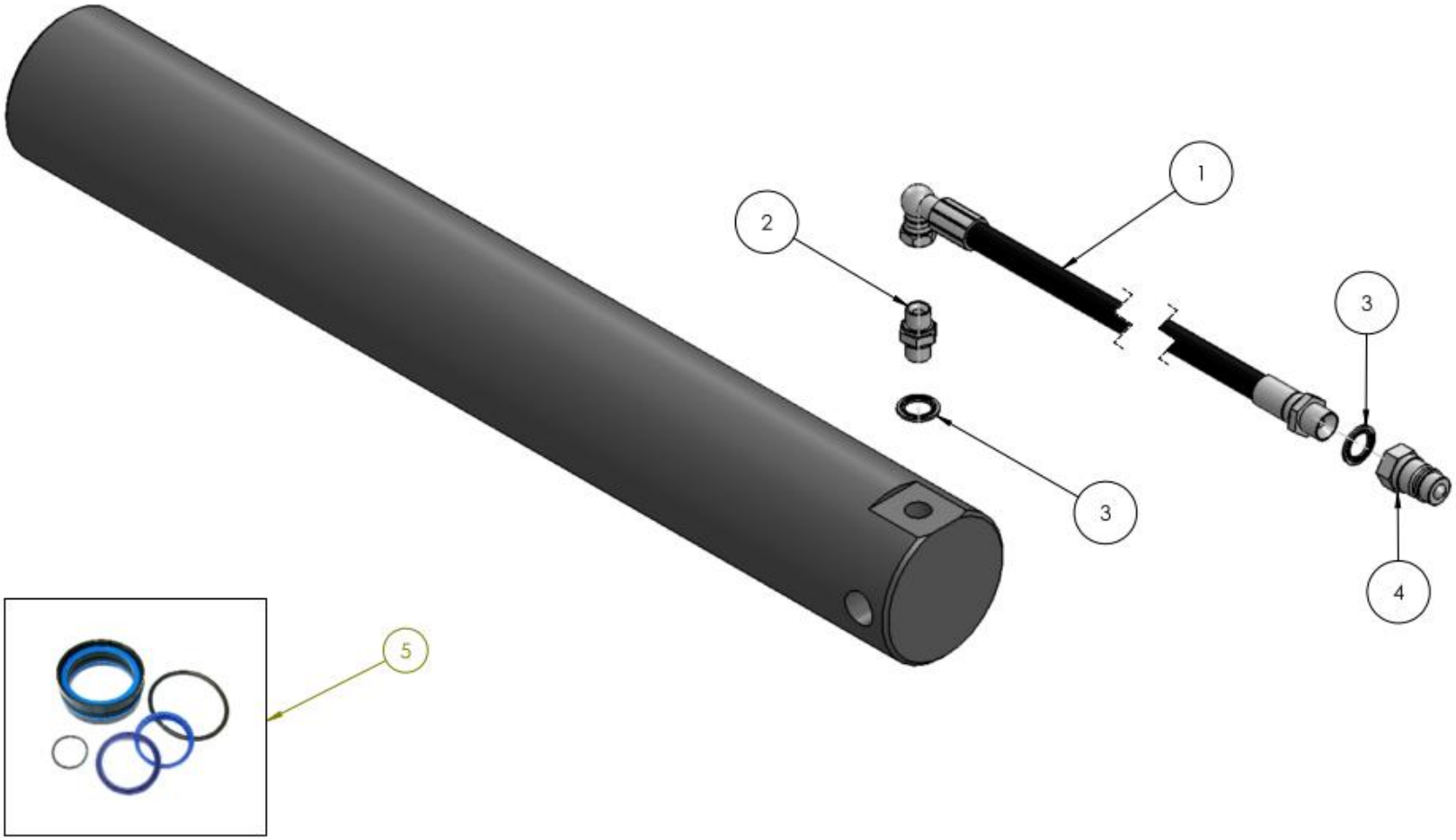

SEE TABLE NO: 005

TABLE NO: 005 TR1 & TR2 TRAILER HYDRAULICS					
ITEM NO	DESCRIPTION	TR1		TR2	
		CODE	QTY	CODE	QTY
1	HYDRAULIC HOSE ASSEMBLY	ZHYD02	1	ZHYD02A	1
2	HYDRAULIC CONNECTOR	ZHYD03	1	ZHYD03	1
3	DOWDY SEAL	ZHYD05	1	ZHYD05	1
4	½” MALE PROBE	ZHYD26	1	ZHYD26	1
5	HYDRAULIC SEAL KIT	P001.382	1	P001.383	1

TR1 & TR2 AXLES PART No's ZGPP183 & ZGPP159

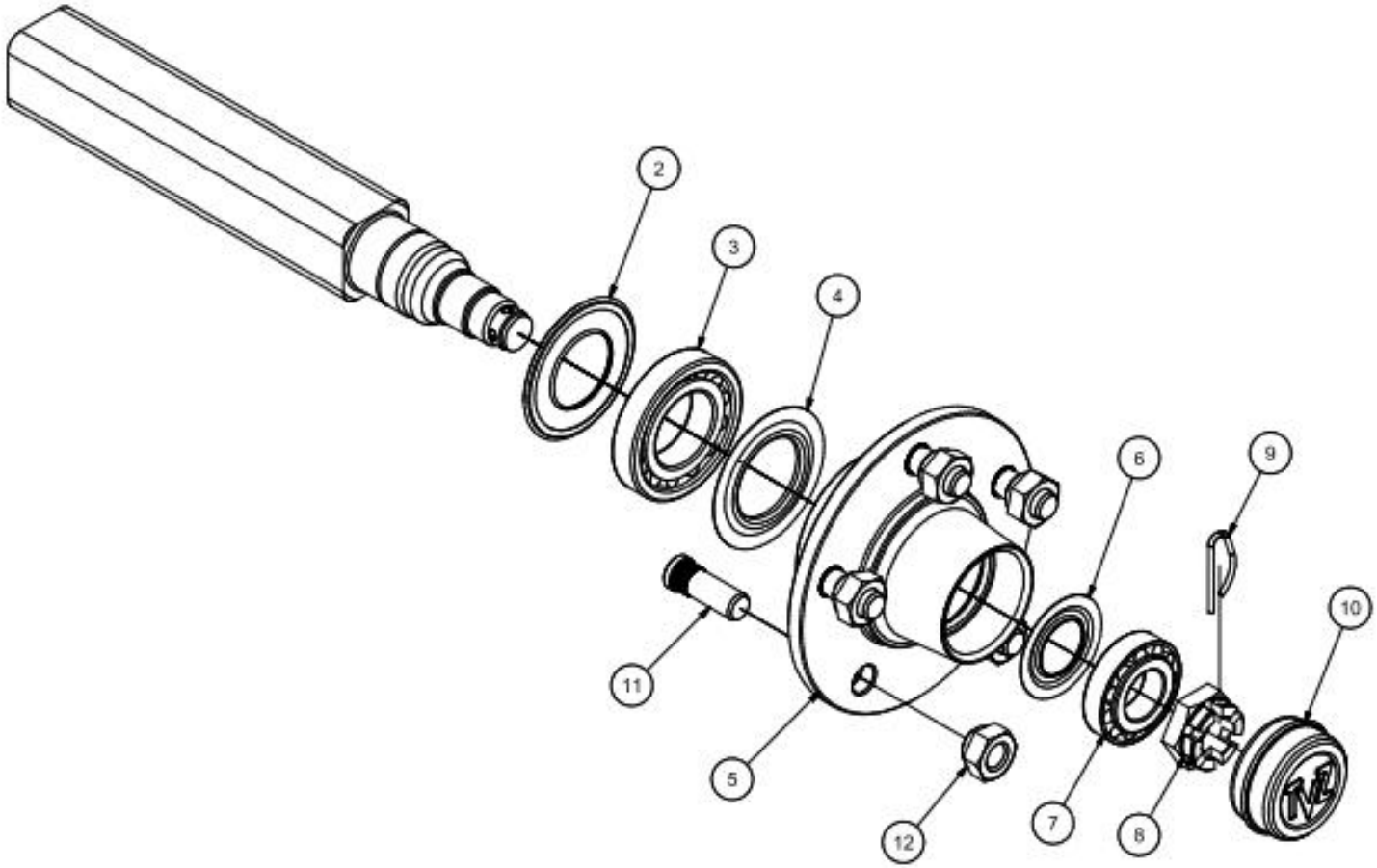

SEE TABLE NO: 006

TABLE NO: 006 TR1 & TR2 AXLES PART No's ZGPP183 & ZGPP159			
		TR1 & TR2	
ITEM NO	DESCRIPTION	CODE	QTY
2	DUST SHIELD	5410851	2
3	BEARING	59130209	2
4	SEAL	5510851	2
5	HUB	61L5JA006	2
6	SEAL	5510621	2
7	BEARING	59130206	2
8	CROWN NUT M27X1.50	57527B1	2
9	SPRING PIN FOR NUT	58204	2
10	DUST CAP 62mm	56106210	2
11	STUD M16X1,45	AX-16451.5	10
12	STUD NUTM16x1,50	AX-161.5	10